Ersatzteilkatalog
Spare parts catalog
Catalogue de pièces de rechange
Catálogo de Repuestos

AEG
OLYMPIA

ESW 2000/2000C/2000i/2500i

Service Department

Inhalt

		Seite	Fiche
1.	**Bekleidung/Housing** Carter/Carcasa		
1.1	Bekleidung/ Housing Carter/ Carcasa	01-001	C3
2.	**Gestell, Papiertraeger/Chassis, Paper carrier** Chassis, Support du papier/Chasis, Unidad portapapel		
2.1	Gestell/ Chassis Chassis/ Chasis	02-001	C8
2.2	Papiertraeger/ Paper carrier Support du papier/ Unidad portapapel	02-002	C12
3.	**Druckwerk/Printer** Bloc d'impression/Unidad impresora		
3.1	Druckwerk/ Printer Bloc d'impression/ Unidad impresora	03-001	C16
3.2	Schwenklager/ Pivot bearing Support pivotante/ Soporte basculante	03-002	C19
3.3	Farbbandtransport, Korrektureinrichtung/ Ribbon transport, Correction device Avance du ruban, Bande de correction/ Transporte de cinta, Dispositivo de correccibn	03-003	C22
3.4	Druckwerksleiterplatte/ Printer pcb Platine mecanisme d'impression/ Placa de unidad impresora	03-004	C25
4.	**Stromversorgung/Power supply** Alimentation/Alimentación		
4.1	Stromversorgung/ Power supply Alimentation/ Alimentación	04-001	C27
4.2	Stromversorgung (Ab Masch. 162478)/ Power supply (W.E.F. Masch. 162478) Alimentation (A partir Masch. 162478)/ Alimentación (Desde Masch. 162478)	04-002	D3
5.	**Elektronik/Electronics** Electronique/Electrónica		
5.1	Steuerelektronik ESW 2000/2000C/ Control electronics pcb ESW 2000/2000C Plaque d'électronique ESW 2000/2000C/ Placa electrónica de control ESW 2000/2000C	05-001	D6
5.2	Steuerelektronik ESW 2000i/ Control electronics pcb ESW 2000i Plaque d'électronique ESW 2000i/ Placa electrónica de control ESW 2000i	05-002	D14
5.3	Steuerelektronik ESW 2500i/ Control electronics pcb ESW 2500i Plaque d'électronique ESW 2500i/ Placa electrónica de control ESW 2500i	05-003	D20
8.	**Bedienfeld/Control panel** Tableau de commande/Panel de mando		
8.1	Leiterplatte Bedienfeld/ Pcb control panel Circuit imprimé tableau de commande/ Placa electrónica panel de mando	08-001	D26
10.	**STANDARD Schnittstellen/STANDARD interfaces** STANDARD jonctions/ESTANDAR interfaces		
10.1	Schnittstelle CENTRONICS/ Interface CENTRONICS Jonction CENTRONICS/ Interface CENTRONICS	10-001	E3
10.2	Schnittstelle RS232C (V24)/ Interface RS232C (V24) Jonction RS232C (V24)/ Interface RS232C (V24)	10-002	E5

1. Bekleidung/Housing

Carter/Carcasa

1.1 Bekleidung
Housing
Carter
Carcasa

Pos.-Nr./Bauteil Pos. no./Comp.	Bestell-Nr. Ref. no.	Benennung Deutsch Denominación Español	Term English	Farbe Color
1	73.661-1009.1/00	RASTFEDER LKS. FLEJE DE ENCLAVAMIENTO IZQUIERDO	STOP SPRING L.H.	
2	67.500-4590.1/50	ABDECKKAPPE TAPA	CAP	F296
2	67.500-4590.1/53	ABDECKKAPPE TAPA	CAP	F332
3	73.663-1221.1/00	PAPIERLEITPLATTE CHAPA DESVIADORA PAPEL	PAPER GUIDE PLATE	F296
3	73.660-1221.1/07	PAPIERLEITPLATTE	PAPER GUIDE PLATE	F332
4	28.1175-001.1/00	FEDERRING ANILLO ELASTICO	RING	
5	336506-050.6/00	SCHEIBE ARANDELA	WASHER	F296
5	336506-050.6/03	SCHEIBE ARANDELA	WASHER	F332
6	66.200-4537.1/00	MAGNET IMAN	MAGNET	
7	545401-000.6/00	REED-KONTAKT INTERRUPTOR "REED"	REED CONTACT	
8	73.660-1222.1/00	ANLAGEWINKEL GUIA-PAPEL DESLIZANTE	BRACKET	F313
8	73.660-1222.1/06	ANLAGEWINKEL GUIA-PAPEL DESLIZANTE	BRACKET	F332
9	73.660-1072.1/00	MERKSCHIEBER INDICADOR DE MARGENES	SLIDE	
10	66.200-4539.1/00	BOGENENDANZEIGER INDICADOR FIN DE PAPEL	PAGE END INDICATUR	F296
10	66.200-4539.1/06	BOGENENDANZEIGER INDICADOR FIN DE PAPEL	PAGE END INDICATOR	F332
11	67.001-4669.1/00	BLATTFEDER FLEJE	FLAT SPRING	
12	73.660-1223.1/00	BLENDSCHUTZ VISERA ANTIRREFLEXIVA	ANTIDAZZLE HOOD	F296
12	73.660-1223.1/10	BLENDSCHUTZ VISERA ANTIRREFLEXIVA	ANTIDAZZLE HOOD	F332
13	73.660-1309.1/00	RASTFEDER RTS. FLEJE DE ENCLAVAMIENTO DERECHO	STOP SPRING L.H.	
14	67.400-4640.2/00	OBERTEIL CARCASA SUPERIOR	UPPER HOUSING	F296
14	67.400-4640.2/02	OBERTEIL CARCASA SUPERIOR AB/W.E.F./DESDE MASCH. 145419	UPPER HOUSING	F296
14	67.400-4640.2/03	OBERTEIL CARCASA SUPERIOR	UPPER HOUSING	F332

Farbschlüssel siehe Kapitel 30 - Color code see chapter 30
Code couleurs voir chapitre 30 - Codigo de colores véase capitulo 30

1. Bekleidung/Housing

Carter/Carcasa

1.1 Bekleidung
Housing
Carter
Carcasa

Pos.-Nr./Bauteil Pos. no./Comp.	Bestell-Nr. Ref. no.	Benennung Deutsch Denominación Español	Term English	Farbe Color
15	73.660-1289.1/00	RASTFEDER FLEJE DE ENCLAVAMIENTO	DETENT SPRING	
16	73.660-1288.1/00	RASTSCHEIBE DISCO DE ENCLAVAMIENTO	LATCH WASHER	F296
16	73.660-1288.1/04	RASTSCHEIBE DISCO DE ENCLAVAMIENTO	LATCH WASHER	F332
17	73.660-1065.1/00	GERAEUSCHABDECKUNG TAPA ANTIRRUIDOS	SOUND MUFFLING HOOD	
18	67.400-4600.2/00	DECKEL KPL. TAPA DE MAQUINA CPL. ESW 2000	CAP ASSY.	F296
18	67.401-4600.2/00	DECKEL KPL. TAPA DE MAQUINA CPL. ESW 2000C	CAP ASSY.	F296
18	67.401-4602.2/00	DECKEL KPL. TAPA DE MAQUINA CPL. ESW 2000i	CAP ASSY.	F296
18	67.421-4600.2/00	DECKEL KPL. TAPA DE MAQUINA CPL. ESW 2500i	CAP ASSY.	F296
18	67.421-4600.2/02	DECKEL KPL. TAPA DE MAQUINA ESW 2500i	CAP ASSY.	F332
19	73.660-1143.1/00	PUFFER TOPE	BUFFER	
20	312309-009.6/00	LINSENSCHRAUBE M4X22 TORNILLO M4X22	OVAL-HEADED SCREW M4X22	
21	67.200-4547.1/00	LEITERPLATTENHALTER SOPORTE DE PLACA ELECTRONICA	PCB HOLDER	
22	67.400-3216.2/00	BUCHSENLEISTE CONECTOR	SOCKET STRIP	
23	67.200-4740.1/00	ANSCHLAG TOPE	STOP	
24	67.400-4550.2/00	BLENDE KPL. PANEL FRONTAL CPL.	PANEL ASSY.	F296
24	67.400-4550.2/01	BLENDE KPL. PANEL FRONTAL CPL.	PANEL ASSY.	F332
25	412408-050.6/00	GUMMIFUSS PIE DE GOMA	RUBBER FOOT	
26	66.300-4105.1/00	KNOPF BOTON	KNOB	F313
26	66.300-4105.1/03	KNOPF BOTON	KNOB	F332

Farbschlüssel siehe Kapitel 30 - Color code see chapter 30
Code couleurs voir chapitre 30 - Codigo de colores véase capítulo 30

1. Bekleidung/Housing

Carter/Carcasa

1.1 Bekleidung
Housing
Carter
Carcasa

Pos.-Nr./Bauteil Pos. no./Comp.	Bestell-Nr. Ref. no.	Benennung Deutsch Denominación Español	Term English	Farbe Color
27	67.400-4518.2/00	KONTAKTPLATTE PLACA CONDUCTORA	CONTACT PLATE	
28	66.300-4522.1/00	ABDECKUNG CUBIERTA	COVER	
29	66.300-4523.1/00	KAPPE TAPA	CAP	F313
29	66.300-4523.1/03	KAPPE TAPA	CAP	F332
30	67.400-4501.2/00	BODENWANNE CARCASA INFERIOR	BASE PLATE	F296
30	67.400-4501.2/01	BODENWANNE CARCASA INFERIOR	BASE PLATE	F332
31	67.400-4598.2/00	TRAEGERPLATTE PLACA SOPORTE	MOUNTING	
32	67.400-3218.2/00	LEITUNGSBUENDEL MANGUERA DE CABLES	CABLE HARNESS	
33	67.400-3219.2/00	LEITUNGSBUENDEL MANGUERA DE CABLES	CABLE HARNESS	
34	66.300-4513.1/00	BLENDE FUER RUECKWAND PANEL PARA CARCASA POSTERIOR	PANEL FOR REAR PLATE	F296
35	312310-009.6/00	LINSENSCHRAUBE M4X30 TORNILLO M4X30	OVAL-HEADED SCREW M4X30	
36	67.500-1594.1/00	BUCHSE CASQUILLO	BUSH	
37	67.200-4540.1/00	RUECKWAND CARCASA POSTERIOR ESW 2000i/2500i	REAR PLATE	F296
37	67.200-4540.1/25	RUECKWAND CARCASA POSTERIOR ESW 2500i	REAR PLATE	F332
37	67.400-4540.1/00	RUECKWAND CARCASA POSTERIOR	REAR PLATE	F296
38	087353-000.6/08	DRUCKFEDER MUELLE PRESIONADOR	COMPRESSION SPRING	
39	334829-000.6/00	SCHEIBE ARANDELA	WASHER	
40	67.400-1555.2/00	KNOPF BOTON	KNOB	F313
40	67.400-1555.2/02	KNOPF BOTON	KNOB	F332
41	67.500-1542.2/50	WALZENDREHKNOPF BORNA DEL RODILLO	PLATEN KNOB	F296
41	67.500-1542.2/58	WALZENDREHKNOPF BORNA DEL RODILLO	PLATEN KNOB	F332

Farbschlüssel siehe Kapitel 30 - Color code see chapter 30
Code couleurs voir chapitre 30 - Codigo de colores véase capitulo 30

1. Bekleidung/Housing

Carter/Carcasa

1.1 Bekleidung
Housing
Carter
Carcasa

Pos.-Nr./Bauteil Pos. no./Comp.	Bestell-Nr. Ref. no.	Benennung Deutsch Denominación Español	Term English	Farbe Color
42	67.500-1544.1/00	BUCHSE CASQUILLO	BUSH	
43	08.3002-001.1/20	BACKE MORDAZA	JAW	
44	312639-000.6/00	SELBSTSCHNEIDESCHRAUBE TORNILLO AUTOCORTANTE	SELF-TAPPING SCREW	
45	093408-000.6/00	SCHEIBE ARANDELA	WASHER	
46	73.660-1285.1/00	SCHUTZKAPPE TAPA PROTECTORA	PROTECTIVE CAP	F296
46	73.660-1285.1/03	SCHUTZKAPPE TAPA PROTECTORA	PROTECTIVE CAP	F332
47	67.200-4549.1/00	ABDECKKAPPE TAPA ESW 2000i	CAP	F296
47	67.200-4549.1/05	ABDECKKAPPE TAPA ESW 2000i	CAP	F332

Farbschlüssel siehe Kapitel 30 - Color code see chapter 30
Code couleurs voir chapitre 30 - Codigo de colores véase capîtulo 30

1. Bekleidung/Housing

Carter/Carcasa

1.1 Bekleidung
Housing
Carter
Carcasa

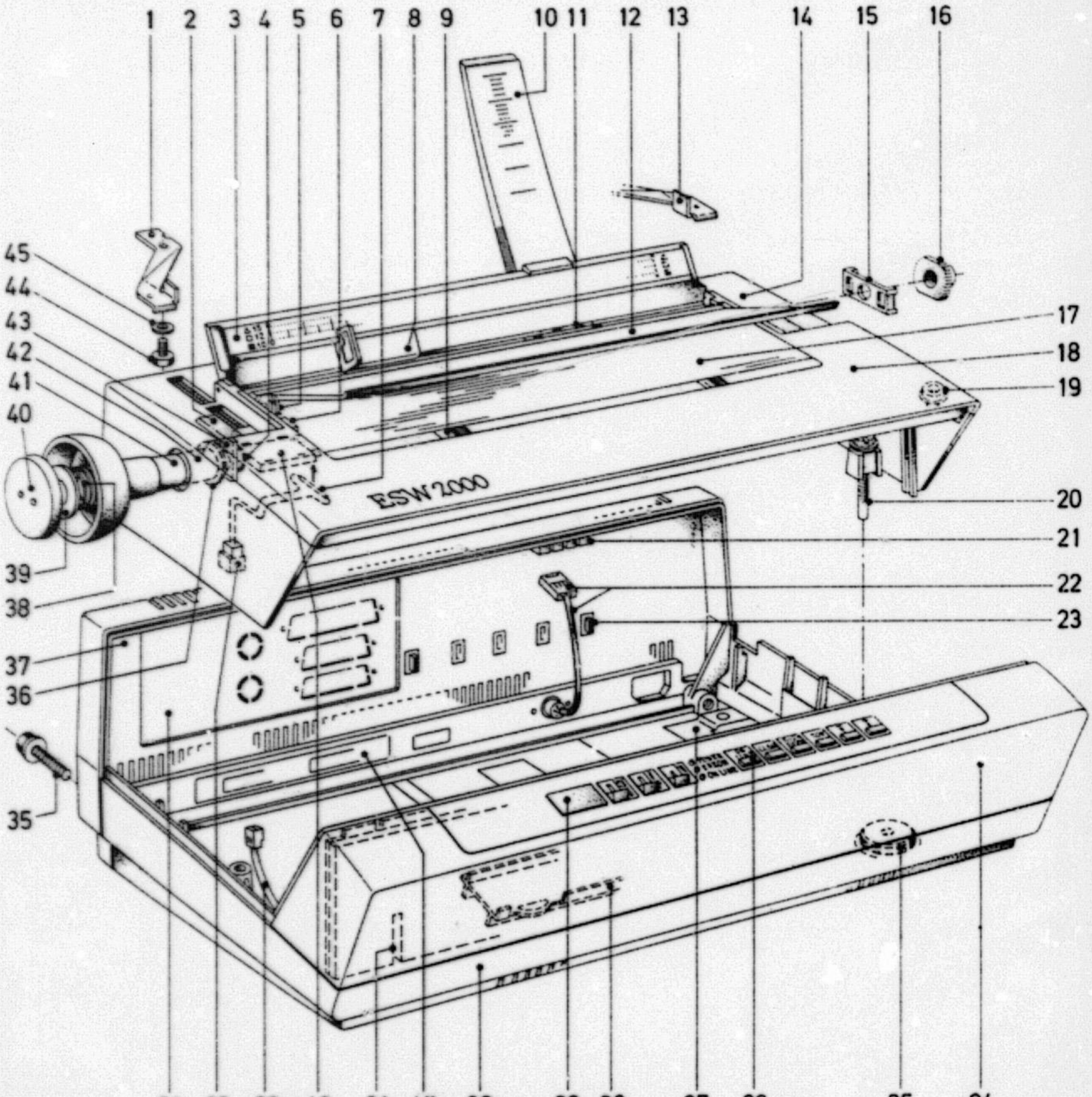

2. Gestell, Papiertraeger/Chassis, Paper carrier
Chassis, Support du papier/Chasis, Unidad portapapel

2.1 Gestell
Chassis
Chassis
Chasis

Pos.-Nr./Bauteil Pos. no./Comp.	Bestell-Nr. Ref. no.	Benennung Deutsch Denominación Español	Term English	Farbe Color
1	67.200-1036.1/00	KONTAKTFEDER FLEJE DE CONTACTO	CONTACT SPRING	
2	67.200-1515.1/00	EXZENTERBOLZEN PERNO EXCENTRICO	ECCENTRIC BOLT	
3	67.200-1060.1/00	RIEGEL RTS. ENCLAVADOR DERECHO	LATCH R.H.	
4	314141-002.6/00	SECHSKANTSCHRAUBE TORNILLO EXAGONAL M4X5	HEXAGONAL BOLT	
5	67.200-1075.1/00	FUEHRUNGSACHSE EJE-GUIA	GUIDE SHAFT	
6	67.001-1590.1/00	LASCHE BRIDA	LIP	
7	541003-000.6/00	MIKROSCHALTER MICROINTERRUPTOR	MICROSWITCH	
8	562843-004.6/00	BUCHSENGEHAEUSE 4 POLIG CAJA DE CONECTOR 4 TERMINALES	SOCKET HOUSING 4 POLE	
9	67.400-1610.2/00	GETRIEBE KPL. ENGRANAJE COMPLETO	GEARING ASSY.	
10	312510-000.6/00	ZYLINDERSCHRAUBE M2,5X4 TORNILLO CILINDRICO M2,5X4	PAN-HEADED SCREW M2,5X4	
11	67.400-1612.2/00	GLEICHSTROMMOTOR MOTOR C.C.	DC MOTOR	
12	695126-000.6/00	DAEMPFUNG AMORTIGUADOR	DAMPING	
13	67.400-1525.2/00	UEBERTRAGUNGSBRUECKE PUENTE DE TRANSMISION	TRANSFER BRIGDE	
14	67.400-1161.1/00	SCHEIBE KUNSTSTOFF ARANDELA PLASTICO AB/W.E.F./DESDE MASCH. xxxxxx	WASHER PLASTIC	
15	012550-000.6/00	ZYLINDERSCHRAUBE M4X5 TORNILLO CILINDRICO M4X5	PAN-HEADED SCREW M4X5	
16	67.200-1516.1/00	EXZENTERBUCHSE CASQUILLO EXCENTRICO	ECCENTRIC BUSH	
17	012552-000.6/00	ZYLINDERSCHRAUBE M4X7 TORNILLO CILINDRICO M4X7	PAN-HEADED SCREW M4X7	
18	67.400-1146.2/00	SCHRITTMOTOR KPL. MOTOR DE PASO CPL.	STEPPING MOTOR ASSY.	
18	67.400-1146.2/01	SCHRITTMOTOR KPL. MOTOR DE PASO CPL. AB/W.E.F./DESDE MASCH. xxxxxx	STEPPING MOTOR ASSY.	
19	67.200-1138.2/00	MOTORAUFNAHME SOPORTE DEL MOTOR	MOTOR MOUNTING	
19	67.400-1138.2/00	MOTORAUFNAHME SOPORTE DEL MOTOR AB/W.E.F./DESDE MASCH. xxxxxx	MOTOR MOUNTING	

2. Gestell, Papiertraeger/Chassis, Paper carrier

Chassis, Support du papier/Chasis, Unidad portapapel

2.1 Gestell
Chassis
Chassis
Chasis

Pos.-Nr./Bauteil Pos. no./Comp.	Bestell-Nr. Ref. no.	Benennung Deutsch Denominacibn Español	Term English	Farbe Color
20	334625-050.6/00	SCHEIBE 5X10 ARANDELA 5X10	WASHER 5X10	
20	334624-050.6/00	SCHEIBE 5X10X2,2 ARANDELA 5X10X2,2	WASHER 5X10X2,2	
21	67.400-1077.2/00	ANTRIEBSRAD KPL. RUEDA MOTRIZ CPL. OHNE KENNUNG	DRIVE GEAR ASSY.	
21	67.400-1076.2/00	ANTRIEBSRAD KPL. RUEDA MOTRIZ CPL. 2 STIRNFLAECHEN GESCHLIFFEN	DRIVE GEAR ASSY.	
21	67.400-1080.2/00	ANTRIEBSRAD KPL. RUEDA MOTRIZ CPL. MIT ACHSEINSTICH	DRIVE GEAR ASSY.	
22	311714-000.6/00	SECHSKANTSCHRAUBE M3X10 TORNILLO EXAGONAL M3X10	HEXAGONAL BOLT M3X10	
23	67.001-1041.1/00	KLEMMBUCHSE CASQUILLO-ABRAZADERA	CLAMPING BUSH	
24	334627-050.6/00	SCHEIBE ARANDELA	WASHER	
25	67.400-1100.2/00	ZAHNSCHEIBE KPL. ARANDELA DENTADA CPL.	TOOTHED LOCK WASHER ASSY.	
26	67.400-1160.1/00	MOTORDAEMPFUNG AMORTIGUACION DEL MOTOR	MOTOR DAMPING	
27	485600-000.6/00	ZUGFEDER MUELLE TENSOR	TENSION SPRING	
28	314117-000.6/00	SECHSKANTSCHRAUBE M4X8 TORNILLO EXAGONAL M4X8	HEXAGONAL BOLT M4X8	
29	67.200-1050.1/00	FUEHRUNGSSCHIENE CARRIL-GUIA	GUIDE RAIL	
30	314141-002.6/00	SECHSKANTSCHRAUBE TORNILLO EXAGONAL M4X5	HEXAGONAL BOLT	
31	67.400-1210.2/00	ZAHNRIEMEN CORREA DENTADA	TIMING BELT	
32	67.400-1186.2/00	ZAHNSCHEIBE ARANDELA DENTADA	TOOTHED LOCK WASHER	
33	67.200-1235.1/00	SCHRAUBENSICHERUNG FIJACION DE TORNILLO	SCREW LOCKING	
34	67.200-1180.1/00	LAGERBOCK SOPORTE	BEARING	
35	314143-009.6/00	SECHSKANTSCHRAUBE M4X55 TORNILLO EXAGONAL M4X55	HEXAGONAL BOLT M4X55	
36	67.200-1229.1/00	KANTENSCHUTZ PROTECTOR	SHIELD	

2. Gestell, Papiertraeger/Chassis, Paper carrier
Chassis, Support du papier/Chasis, Unidad portapapel

2.1 Gestell
Chassis
Chassis
Chasis

Pos.-Nr./Bauteil Pos. no./Comp.	Bestell-Nr. Ref. no.	Benennung Deutsch Denominación Español	Term English	Farbe Color
37	67.200-1230.1/00	BLENDE CUBIERTA	PANEL	
38	314117-000.6/00	SECHSKANTSCHRAUBE M4X8 TORNILLO EXAGONAL M4X8	HEXAGONAL BOLT M4X8	
39	034320-000.6/02	SCHEIBE ARANDELA	WASHER	
40	034277-002.6/00	SCHEIBE ARANDELA	WASHER	
41	486915-000.6/00	DRUCKFEDER MUELLE PRESIONADOR	COMPRESSION SPRING	
18/ 19	67.400-1135.2/00	MOTORAUFNAHME KPL. SOPORTE DEL MOTOR CPL. AB/W.E.F./DESDE MASCH. xxxxxx	MOTOR MOUNTING ASSY.	
O.ILLUSTR.	67.200-1514.1/00	LAGERKAPPE CUBIERTA-SOPORTE PARA PERNO EXCENTRICO	BEARING CAP	

2. Gestell, Papiertraeger/Chassis, Paper carrier
Chassis, Support du papier/Chasis, Unidad portapapel

2.1 Gestell
Chassis
Chassis
Chasis

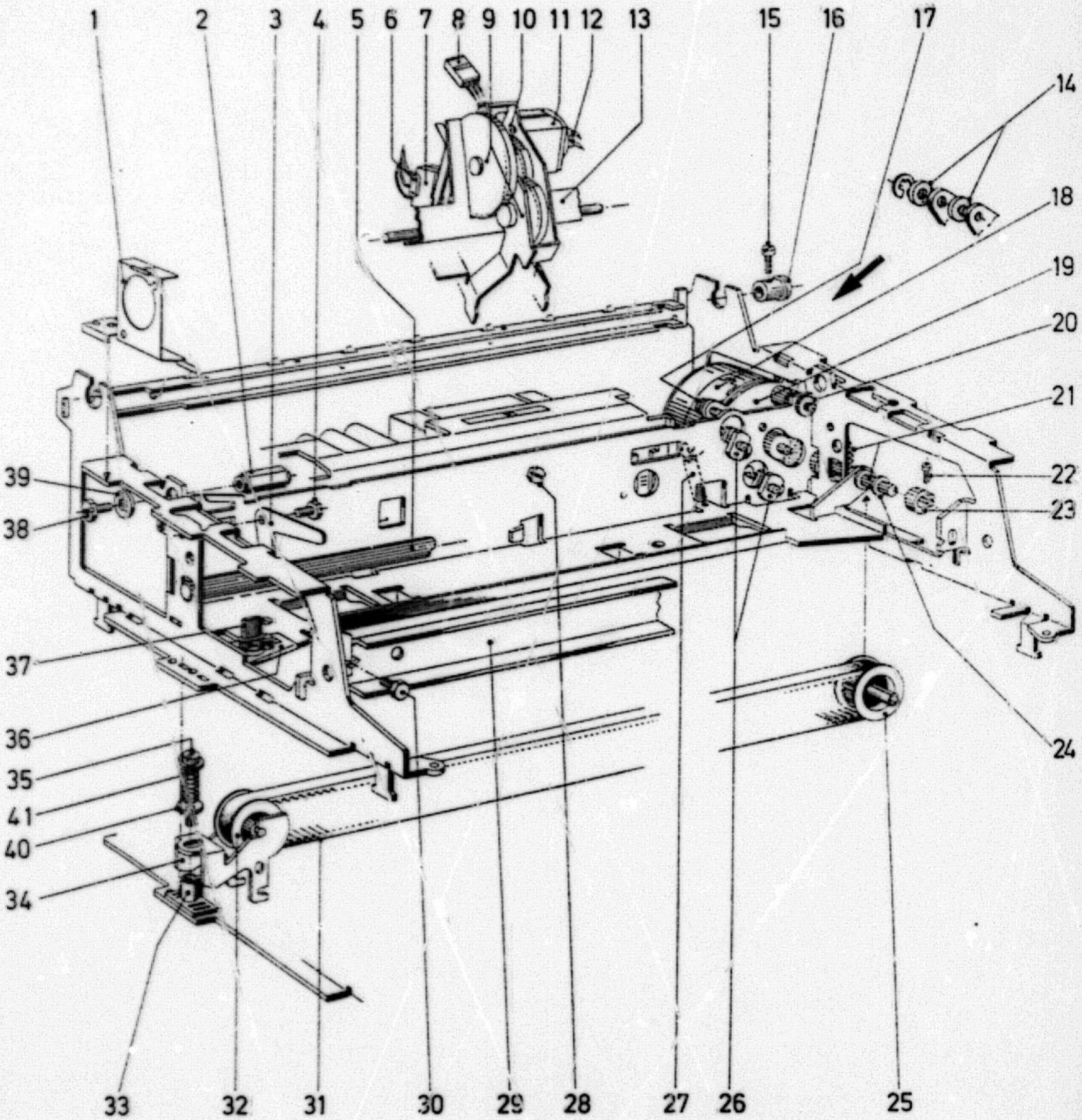

2. Gestell, Papiertraeger/Chassis, Paper carrier
Chassis, Support du papier/Chasis, Unidad portapapel

2.2 Papiertraeger
Paper carrier
Support du papier
Unidad portapapel

Pos.-Nr./Bauteil Pos. no./Comp.	Bestell-Nr. Ref. no.	Benennung Deutsch Denominación Español	Term English	Farbe Color
1	67.200-1532.1/00	HEBEL LKS. PALANCA IZQUIERDA	LEVER L.H.	
2	87.001-1632.1/00	WALZENLAGER SOPORTE DEL RODILLO IMPRESION	BEARING	
3	67.400-1531.1/00	PAPIERHALTESTANGE BARRA PISAPAPEL	PAPER RETAINING BAIL	
4	87.001-1542.2/00	PAPIERABLEITER KPL. CHAPA DESVIADORA PAPEL CPL.	PAPER DIVERTER ASSY.	F111
5	67.101-1766.2/00	SCHREIBWALZE RODILLO DE IMPRESION	PLATEN	
5	67.421-1766.2/00	SCHREIBWALZE (NEU) RODILLO DE IMPRESION (NUEVA)	PLATEN (NEW)	
6	06.3351-131.2/02	PAPIERHALTEROLLE RODILLO PISAPAPEL	PAPER RETAINING ROLL	
7	67.400-1525.2/00	UEBERTRAGUNGSBRUECKE PUENTE DE TRANSMISION	TRANSFER BRIGDE	
8	084154-000.6/00	ZUGFEDER MUELLE TENSOR	TENSION SPRING	
9	67.200-1533.1/00	HEBEL RTS. PALANCA DERECHA	LEVER R.H.	
10	67.200-1508.1/00	PAPIERLOESER LIBERAPAPEL	PAPER RELEASE	F313
10	67.200-1508.1/06	PAPIERLOESER LIBERAPAPEL	PAPER RELEASE	F332
11	353623-006.6/90	BUCHSE CASQUILLO	BUSH	
12	67.500-1591.2/00	WALZENANTRIEB SISTEMA MOTRIZ RODILLO IMPRESION	PLATEN DRIVE	
13	87.001-1548.1/00	ACHSE EJE	SHAFT	
14	67.500-1595.1/00	LAGER CASQUILLO	BEARING	
15	87.001-1578.1/00	RITZEL F. PAPIERLOESUNG PINON PARA MECANISMO LIBERAPAPEL	PINION	
16	67.200-1501.2/00	TRAEGER KPL. SOPORTE CPL.	MOUNTING ASSY.	
17	66.140-1516.2/00	PAPIERFUEHRUNGSWANNE CHAPA ALIMENTACION PAPEL AB/W.E.F./DESDE MASCH. 145419	PAPER GUIDE PAN	
17	67.600-1516.2/00	PAPIERFUEHRUNGSWANNE CHAPA ALIMENTACION PAPEL	PAPER GUIDE PAN	
18	67.001-1514.1/00	BLATTFEDER FLEJE	FLAT SPRING	

Farbschlüssel siehe Kapitel 30 - Color code see chapter 30
Code couleurs voir chapitre 30 - Codigo de colores véase capitulo 30

2. Gestell, Papiertraeger/Chassis, Paper carrier
Chassis, Support du papier/Chasis, Unidad portapapel

2.2 Papiertraeger
Paper carrier
Support du papier
Unidad portapapel

Pos.-Nr./Bauteil Pos. no./Comp	Bestell-Nr. Ref. no.	Benennung Deutsch Denominación Español	Term English	Farbe Color
19	67.200-1511.1/00	PAPIERLOESEWELLE EJE LIBERAPAPEL	PAPER RELEASE SHAFT	
20	316102-000.6/00	GEWINDESTIFT M3X16 PERNO ROSCADO M3X16	THREADED PIN M3X16	
21	67.200-1534.1/00	PAPIERZUFUEHRUNG ALIMENTADOR DE PAPEL	PAPER FEEDING	
22	67.200-1505.1/00	FEDERBLECH CHAPA-FLEJE	SPRING-LOADED PLATE	
22	67.200-1505.1/04	FEDERBLECH CHAPA-FLEJE AB/W.E.F./DESDE MASCH. 145419	SPRING-LOADED PLATE	
23	67.200-1545.2/00	SCHRITTMOTOR MOTOR DE PASO	STEPPING MOTOR	
24	012550-000.6/00	ZYLINDERSCHRAUBE M4X5 TORNILLO CILINDRICO M4X5	PAN-HEADED SCREW M4X5	
25	87.001-1596.2/00	ROLLENHEBEL PALANCA CON RODILLO	ROLLER LEVER	
26	012526-000.6/00	ZYLINDERSCHRAUBE TORNILLO CILINDRICO M3X4	PAN-HEADED SCREW M3X4	
27	87.001-1526.1/00	ZAHNRAD 4,25MM PINON TRANSPORTE 4,25MM	GEAR 0,17INCH	
27	87.001-1527.1/00	ZAHNRAD 5,00MM PINON TRANSPORTE 5,00MM	GEAR 0,20INCH	
28	67.400-1570.2/00	STECHACHSE KPL. EJE DE DESEMBRAGUE CPL.	PLATEN SHAFT ASSY.	F296
28	67.400-1570.2/01	STECHACHSE KPL. EJE DE DESEMBRAGUE CPL.	PLATEN SHAFT ASSY.	F332
29	87.001-1671.1/00	ZAHNRIEMEN CORREA DENTADA	TIMING BELT	
31	67.200-1527.1/00	ACHSE EJE PARA DESPLAZAMIENTO "CARRO"	SHAFT	
32	047663-060.6/00	SPANNSTIFT PASADOR	DOWEL PIN	
33	87.001-1639.1/00	RITZEL F. WALZENVERSTELLUNG PINON PARA DESPLAZAMIENTO DE RODILLO	PINION	
34	67.200-1521.1/00	SCHALTHEBEL PALANCA DE MANDO	ACTUATING LEVER	F313
34	67.200-1521.1/05	SCHALTHEBEL PALANCA DE MANDO	ACTUATING LEVER	F332
35	67.200-1522.1/00	VERSTELLHEBEL PALANCA DE DESPLAZAMIENTO	ADJUSTING LEVER	F313
35	67.200-1522.1/05	VERSTELLHEBEL PALANCA DE DESPLAZAMIENTO	ADJUSTING LEVER	F332

Farbschlüssel siehe Kapitel 30 - Color code see chapter 30
Code couleurs voir chapitre 30 - Codigo de colores véase capitulo 30

2. Gestell, Papiertraeger/Chassis, Paper carrier
Chassis, Support du papier/Chasis, Unidad portapapel

2.2 Papiertraeger
Paper carrier
Support du papier
Unidad portapapel

Pos.-Nr./Bauteil Pos. no./Comp.	Bestell-Nr. Ref. no.	Benennung Deutsch Denominación Español	Term English	Farbe Color
36	08.3130-001.1/03	SPANNBUEGEL TENSOR PALANCA	TENSION BRACKET	
37	08.3131-001.1/06	SPANNBUEGEL TENSOR PALANCA	TENSION BRACKET	
38	475102-000.6/00	ACHSE EJE	SHAFT	
38	475107-000.6/00	ACHSE EJE AB/W.E.F./DESDE MASCH. 145419	SHAFT	
39	08.2196-001.2/00	ANDRUCKROLLE VORN RODILLO PRESIONADOR ANTERIOR	PRESSURE ROLL FRONT	
40	48.001-1154.2/00	ANDRUCKROLLE HINTEN RODILLO PRESIONADOR POSTERIOR	PRESSURE ROLL REAR	
40	66.140-1522.2/00	ANDRUCKROLLE HINTEN RODILLO PRESIONADOR POSTERIOR AB/W.E.F./DESDE MASCH. 145419	PRESSURE ROLL REAR	
41	475108-000.6/00	ACHSE EJE AB/W.E.F./DESDE MASCH. 145419	SHAFT	
41	48.001-1157.1/00	ACHSE EJE	SHAFT	
42	67.600-1620.2/00	LEITERPLATTE KPL. PLACA ELECTRONICA CPL.	PCB ASSY.	

2. Gestell, Papiertraeger/Chassis, Paper carrier
Chassis, Support du papier/Chasis, Unidad portapapel

2.2 Papiertraeger
Paper carrier
Support du papier
Unidad portapapel

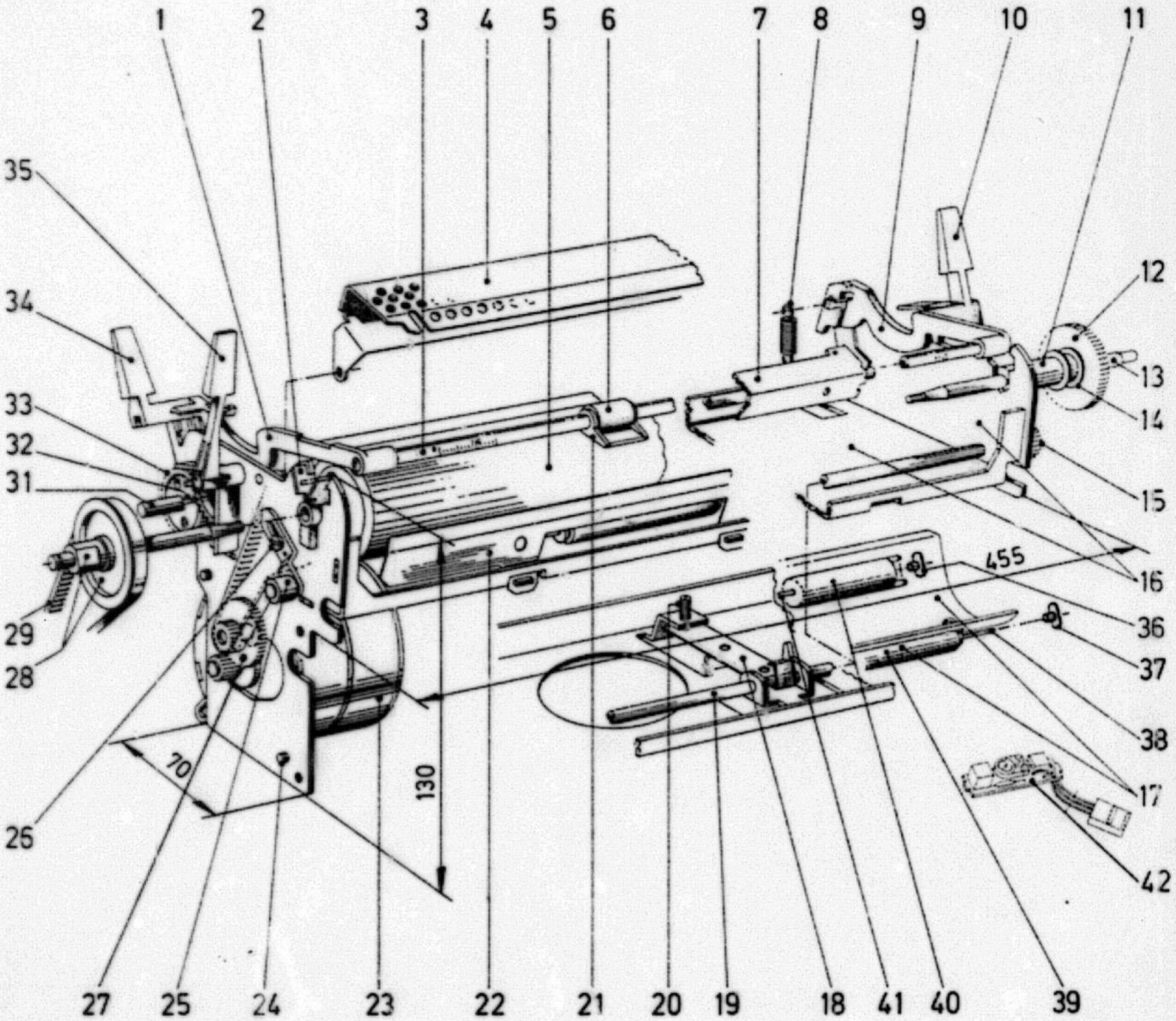

3. Druckwerk/Printer
Bloc d'impression/Unidad impresora

3.1 Druckwerk
Printer
Bloc d'impression
Unidad impresora

Pos.-Nr./Bauteil Pos. no./Comp.	Bestell-Nr. Ref. no.	Benennung Deutsch Denominación Español	Term English	Farbe Color
1	66.210-2121.2/00	KARTENHALTER TARJETERO CPL.	CARD HOLDER	
2	67.200-2740.1/00	KASSETTENFUEHRUNG LKS. GUIA DEL CASSETTE IZQUIERDA	CASSETTE GUIDE L.H.	
3	67.200-2754.1/00	FEDER MUELLE	SPRING	
4	67.200-2748.1/00	STEUERHEBEL PALANCA DE CONTROL	CONTROL LEVER	
5	67.200-2725.2/00	ANDRUCKLAGER SOPORTE PRESIONADOR	PRESSURE BEARING	
6	67.200-2735.1/00	KASSETTENFUEHRUNG RTS. GUIA DEL CASSETTE DERECHA	CASSETTE GUIDE R.H.	
7	67.200-2020.1/06	FEDERHEBEL PALANCA-FLEJE	SPRING LEVER	
8	67.200-2015.1/01	ACHSE EJE	SHAFT	
9	083979-000.6/00	ZUGFEDER MUELLE TENSOR	TENSION SPRING	
10	67.200-2170.2/00	SCHRITTMOTOR FARBBANDANTRIEB MOTOR DE PASO MECANISMO MOTRIZ DE CINTA	STEPPING MOTOR RIBBON DRIVE	
11	012526-000.6/00	ZYLINDERSCHRAUBE TORNILLO CILINDRICO M3X4	PAN-HEADED SCREW M3X4	
12	67.200-2185.1/00	FLANSCH BRIDA	FLANGE	
13	67.200-2125.1/00	GLEITSCHUH ZAPATA	SLIDING SHOE	
14	67.001-2177.1/00	SCHMIERPLATTE LUBRICADOR	LUBRICATION PLATE	
15	67.200-2130.2/00	KONTAKTFEDER M. DAEMPFUNG FLEJE DE CONTACTO CON AMORTIGUADOR	CONTACT SPRING	
16	084007-000.6/01	ZUGFEDER MUELLE TENSOR	TENSION SPRING	
17	67.200-2105.2/00	DRUCKWERKSGESTELL CHASIS DE UNIDAD IMPRESORA	PRINTER CHASSIS	
18	67.200-2215.1/00	LEITERPLATTENAUFNAHME SOPORTE DE PLACA ELECTRONICA	PCB HOLDER	
19	67.200-2430.2/00	DRUCKWERKS-LEITERPLATTE KPL. PLACA DE UNIDAD IMPRESORA CPL.	PRINTER PCB ASSY.	
20	671711-000.6/00	GABELLICHTSCHRANKE PALPACION OPTICA	LIGHT BARRIER	
21	67.200-2143.1/00	SCHALTARM BRAZO ACTIVADOR	ACTUATING ARM	
22	67.200-4533.1/00	STECKER CONECTOR	PLUG	

3. Druckwerk/Printer
Bloc d'impression/Unidad impresora

3.1 Druckwerk
Printer
Bloc d'impression
Unidad impresora

Pos.-Nr./Bauteil Pos. no./Comp.	Bestell-Nr. Ref. no.	Benennung Deutsch Denominación Español	Term English	Farbe Color
23	012526-000.6/00	ZYLINDERSCHRAUBE TORNILLO CILINDRICO M3X4	PAN-HEADED SCREW M3X4	
24	034055-000.6/00	SCHEIBE ARANDELA	WASHER	
25	67.200-2757.1/00	EMC-BLECH CHAPA "EMC"	EMC PLATE	
26	67.400-1250.2/00	FLACHBANDLEITUNG KPL MANGUERA PLANA CPL.	FLAT CABLE ASSY.	
27	67.200-2745.1/00	FEDERLAGER SOPORTE-FLEJE	SPRING BEARING	
O.ILLUSTR.	67.200-2001.2/00	DRUCKWERK KPL. UNIDAD IMPRESORA CPL. MIT/WITH/CON CORRECTION	PRINTER ASSY.	
O.ILLUSTR.	67.400-2001.2/00	DRUCKWERK KPL. UNIDAD IMPRESORA CPL. OHNE/WITHOUT/SIN CORRECTION	PRINTER ASSY.	
O.ILLUSTR.	67.421-2001.2/00	DRUCKWERK KPL. UNIDAD IMPRESORA CPL. ESW 2500i	PRINTER ASSY.	

3.1 Druckwerk
Printer
Bloc d'impression
Unidad impresora

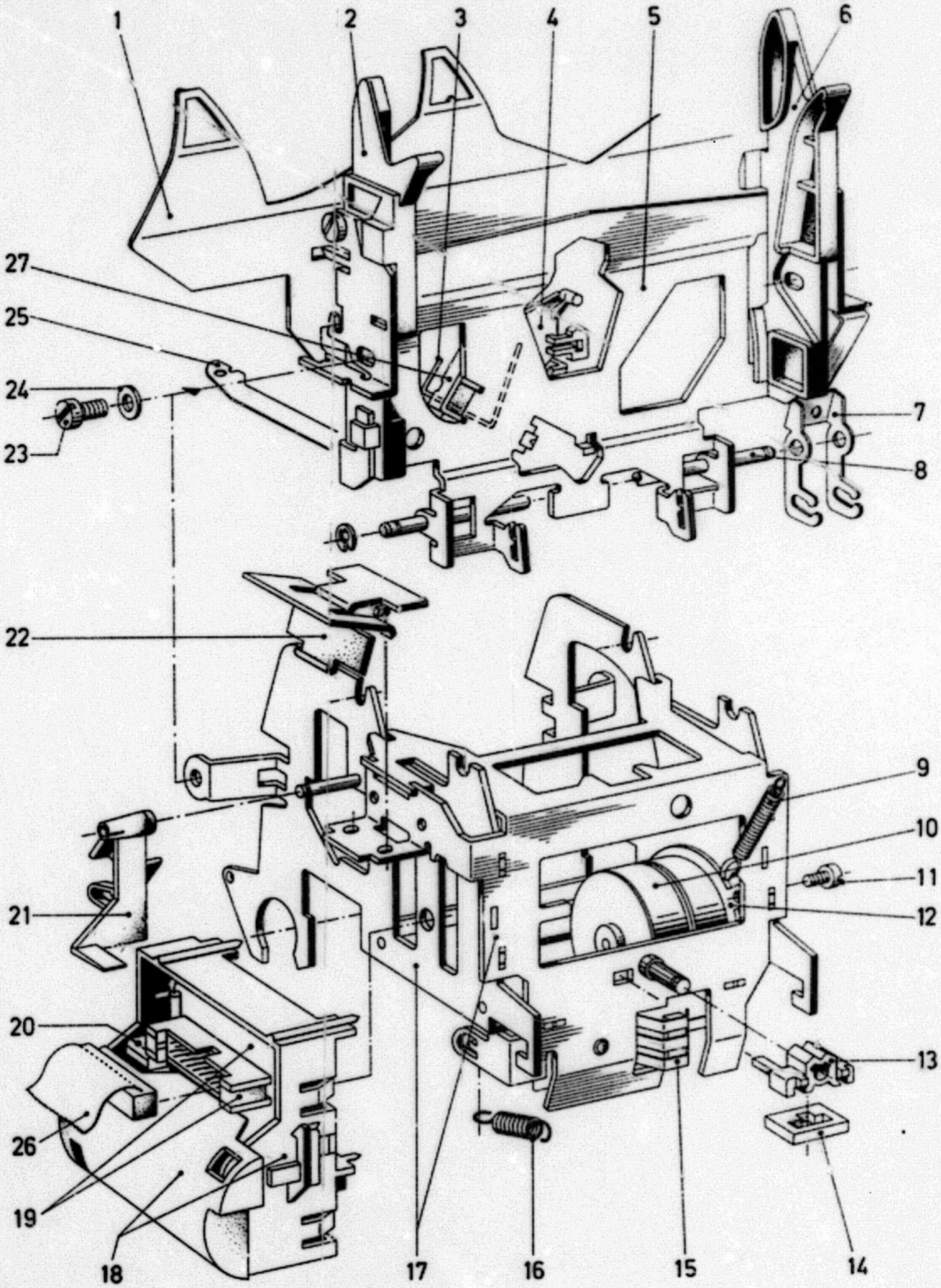

3.2 Schwenklager
Pivot bearing
Support pivotante
Soporte basculante

Pos.-Nr./Bauteil Pos. no./Comp.	Bestell-Nr. Ref. no.	Benennung Deutsch Denominacibn Español	Term English	Farbe Color
1	352807-000.6/00	STELLRING ANILLO DE AJUSTE	ADJUSTING RING	
2	312916-000.6/00	ANSATZSCHRAUBE M3 TORNILLO-TOPE M3	SHOULDER SCREW M3	
3	67.200-2570.1/00	ZEIGER INDICADOR	INDICATOR	
4	67.200-2533.1/00	DAEMPFUNGSPLATTE PLACA AMORTIGUADORA	DAMPING PLATE	
5	67.200-2536.1/00	LAGER FUER RUECKHOLFEDER SOPORTE PARA FLEJE DE REPOSICIONAMIENTO AB/W.E.F./DESDE MASCH. 139621	BEARING FOR RETURN SPRING	
6	67.200-2597.1/00	RUECKHOLFEDER FLEJE DE REPOSICIONAMIENTO	RETURN SPRING	
7	67.200-2650.1/00	ENTRIEGELUNGSHEBEL PALANCA DE DESENCLAVAMIENTO	RELEASE LEVER	
8	67.200-2580.2/00	ABSCHLAGHAMMER MARTILLO DE IMPRESION	HAMMER	
8	67.200-2580.2/12	ABSCHLAGHAMMER MARTILLO DE IMPRESION ESW 2500i	STROKE HAMMER	
9	67.200-2516.2/00	FUSSGLEITSTUECK BASE SISTEMA IMPRESION	SLIDING FOOT	
9	67.421-2516.2/00	FUSSGLEITSTUECK BASE SISTEMA IMPRESION ESW 2500i	SLIDING FOOT	
10	67.200-2525.1/00	RUECKPRALLDAEMPFUNG AMORTIGUADOR DE REBOTES	BOUNCE DAMPING	
11	083907-000.6/00	ZUGFEDER MUELLE TENSOR	TENSION SPRING	
12	67.200-2530.1/00	BLATTFEDER FLEJE	FLAT SPRING	
13	67.200-2545.1/00	GEWINDEPLATTE CHAPA ROSCADA	THREADED PLATE	
14	67.200-2625.1/00	ACHSE EJE	SHAFT	
15	67.200-2530.1/00	RASTHEBEL PALANCA DE ENCLAVAMIENTO	DETENT LEVER	
16	483836-000.6/00	ZUGFEDER MUELLE TENSOR	TENSION SPRING	
17	67.200-2620.1/00	RIEGEL RTS. ENCLAVADOR DERECHO	LATCH R.H.	
18	67.200-2508.1/00	SCHRITTMOTOR MOTOR DE PASO	STEPPING MOTOR	

3. Druckwerk/Printer
Bloc d'impression/Unidad impresora

3.2 Schwenklager
Pivot bearing
Support pivotante
Soporte basculante

Pos.-Nr./Bauteil Pos. no./Comp.	Bestell-Nr. Ref. no.	Benennung Deutsch Denominación Español	Term English	Farbe Color
19	67.200-2475.2/00	SCHWENKLAGER MONT. SOPORTE BASCULANTE MONTADO	PIVOT BEARING ASSEMBLED	
19	67.421-2475.2/00	SCHWENKLAGER MONT. SOPORTE BASCULANTE MONTADA ESW 2500i	PIVOT BEARING ASSEMBLED	
20	083807-000.6/00	ZUGFEDER MUELLE TENSOR	TENSION SPRING	
21	67.200-2503.1/00	LAGERBUCHSE CASQUILLO-SOPORTE	BEARING BUSHING	
22	57.001-2226.1/00	SCHMIERFILZ (DW) FIELTRO LUBRICANTE (U.I.)	LUBRICATION FELT (P.U.)	
23	67.200-2660.1/00	BUCHSE CASQUILLO	BUSH	
24	67.200-2599.1/00	KABELKLEMME CLEMA DE CABLE	CABLE CLIP	
25	67.200-2577.1/00	ZAPFENSCHRAUBE PERNO-TORNILLO	SHOULDER SCREW	
26	67.200-2553.1/00	KASSETTENHALTER SOPORTE DE CASSETTE	CASSETTE RETAINER	
27	67.200-2558.2/00	LEITERPLATTE KPL PLACA ELECTRONICA CPL.	PCB ASSY.	
28	486742-000.6/00	DRUCKFEDER MUELLE PRESIONADOR	COMPRESSION SPRING	
29	030904-000.6/00	SECHSKANTMUTTER M3X2,4 TUERCA EXAGONAL M3X2,4	HEXAGONAL NUT M3X2,4	
30	316125-000.6/00	GEWINDESTIFT M3X3 PERNO ROSCADO M3X3	THREADED PIN M3X3	
31	67.200-2600.2/00	RADAUFNAHME KPL SOPORTE DE RUEDA IMPRESORA CPL.	WHEEL MOUNTING ASSY.	
32	57.001-2164.1/00	MITNEHMER ARRASTRADOR	DRIVER	
33	67.200-2575.1/00	LAGERSTIFT PERNO-SOPORTE	BEARING PIN	
34	67.200-2606.1/00	LASCHE BRIDA	LIP	

3. Druckwerk/Printer

Bloc d'impression/Unidad impresora

3.2 Schwenklager
Pivot bearing
Support pivotante
Soporte basculante

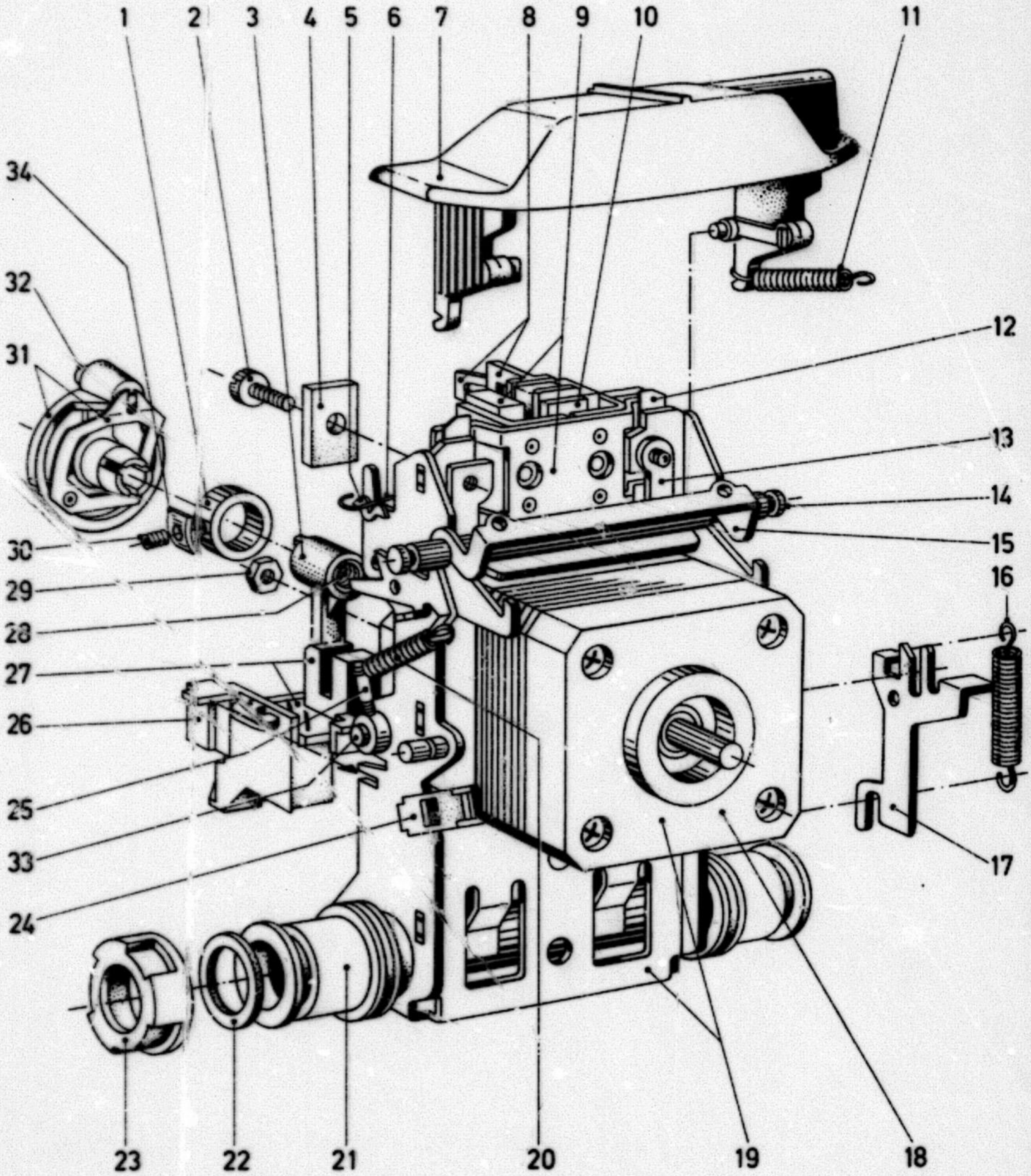

3. Druckwerk/Printer

Bloc d'impression/Unidad impresora

3.3 Farbbandtransport, Korrektureinrichtung
Ribbon transport, Correction device
Avance du ruban, Bande de correction
Transporte de cinta, Dispositivo de corrección

Pos.-Nr./Bauteil Pos. no./Comp.	Bestell-Nr. Ref. no.	Benennung Deutsch Denominación Español	Term English	Farbe Color
1	67.200-2365.1/00	LAGER F. KASSETTENAUFNAHME SOPORTE PARA SOPORTE DE CASSETTE	BEARING FOR CASSETTE COMPARTM.	
2	67.200-2395.1/00	PUFFER TOPE	BUFFER	
3	67.200-2060.1/00	ACHSE EJE	SHAFT	
4	67.200-2400.2/00	KONTAKTTRAEGER KPL SOPORTE DE CONTACTO CPL.	CONTACT SUPPORT ASSY.	
8	67.200-2351.2/00	KASSETTENAUFNAHME KPL SOPORTE DE CASSETTE CPL.	CASSETTE COMPARTMENT ASSY.	
9	87.001-2257.1/00	BUCHSE CONECTOR	BUSH	
10	87.001-2253.1/00	ZENTRIERSTIFT PERNO POSICIONADOR	CENTERING PIN	
11	67.200-2361.1/00	RASTKLINKE F. KASS.-AUFNAHME TRINQUETE DE ENCLAVAMIENTO PARA SOPORTE DE CASSE	DETENT PAWL FOR CASSETTE COMP.	
12	083373-000.6/00	ZUGFEDER MUELLE TENSOR	TENSION SPRING	
14	67.200-2390.1/00	ZAHNRAD F. FARBBANDTRANSP. KPL. PINON TRANSPORTE PARA TRANSPORTE DE CINTA CPL.	GEAR FOR RIBBON TRANSPORT ASSY.	
15	90.7093-000.2/00	RITZEL F. FARBBANDANTRIEB PINION PARA MECANISMO MOTRIZ DE CINTA	PINION FOR RIBBON DRIVE	
16	87.001-2262.1/00	MITNEHMER ARRASTRADOR	DRIVER	
17	67.200-2279.1/00	ROLLE RODILLO	ROLLER	
18	481411-000.6/00	ZUGFEDER MUELLE TENSOR	TENSION SPRING	
19	67.200-2280.1/00	ROLLENFUEHRUNG LKS. GUIA DEL RODILLO IZQUIERDA	ROLLER GUIDE L.H.	
20	67.200-2281.1/00	ROLLENFUEHRUNG RTS. GUIA DEL RODILLO DERECHA	ROLLER GUIDE R.H.	
21	083368-000.6/00	ZUGFEDER MUELLE TENSOR	TENSION SPRING	
22	67.200-2290.1/00	SCHLIESSHEBEL PALANCA DE ENCLAVAMIENTO	LOCKING LEVER	
23	334448-050.6/00	SCHEIBE ARANDELA	WASHER	
24	67.200-2295.1/00	HEBEL PALANCA	LEVER	
25	67.200-2105.2/00	DRUCKWERKSGESTELL CHASIS DE UNIDAD IMPRESORA	PRINTER CHASSIS	
26	67.200-2190.2/00	STIRNRAD KPL PINON CILINDRICO CPL.	GEAR ASSY.	

3. Druckwerk/Printer

Bloc d'impression/Unidad impresora

3.3 Farbbandtransport, Korrektureinrichtung
Ribbon transport, Correction device
Avance du ruban, Bande de correction
Transporte de cinta, Dispositivo de corrección

Pos.-Nr./Bauteil Pos. no./Comp.	Bestell-Nr. Ref. no.	Benennung Deutsch Denominación Español	Term English	Farbe Color
27	67.200-2001.2/00	DRUCKWERK KPL. UNIDAD IMPRESORA CPL. MIT/WITH/CON CORRECTION	PRINTER ASSY.	
27	67.400-2001.2/00	DRUCKWERK KPL. UNIDAD IMPRESORA CPL. OHNE/WITHOUT/SIN CORRECTION	PRINTER ASSY.	
27	67.421-2001.2/00	DRUCKWERK KPL. UNIDAD IMPRESORA CPL. ESW 2500i	PRINTER ASSY.	
28	012526-000.6/00	ZYLINDERSCHRAUBE TORNILLO CILINDRICO M3X4	PAN-HEADED SCREW M3X4	
29	67.200-2200.2/00	AUFNAHME KPL SOPORTE CPL.	RECEPTACLE ASSY.	
30	67.200-2170.2/00	SCHRITTMOTOR FARBBANDANTRIEB MOTOR DE PASO MECANISMO MOTRIZ DE CINTA	STEPPING MOTOR RIBBON DRIVE	
31	012526-000.6/00	ZYLINDERSCHRAUBE TORNILLO CILINDRICO M3X4	PAN-HEADED SCREW M3X4	
32	67.200-2155.2/00	KURVENHEBEL PALANCA DE LEVA	CAM LEVER	
33	67.200-2065.1/00	KONTAKTFEDER FLEJE DE CONTACTO	CONTACT SPRING	
34	67.200-2300.2/00	ZUGSTANGE TIRANTE	LINK	
35	67.200-2250.2/00	KORREKTURBANDTRAEGER SOPORTE DE CINTA CORRECTORA	CORRECTION RIBBON CARRIER	
36	67.200-2055.1/00	LAGER CASQUILLO	BEARING	
37	083518-000.6/00	ZUGFEDER MUELLE TENSOR	TENSION SPRING	
38	67.200-2366.1/00	SCHEIBE 1,0MM GELB ARANDELA 1,0MM AMARILLO	WASHER 0.04INCH YELLOW	
38	67.200-2367.1/00	SCHEIBE 1,2MM BLAU ARANDELA 1,2MM AZUL	WASHER 0.05INCH BLUE	
39	67.200-2275.1/00	KLINKE FUER KORREKTUR TRINQUETE PARA CORRECCION	PAWL FOR CORRECTION	
40	87.004-2292.1/00	TRANSPORTRAD F. KORREKTUR PINON DE TRANSPORTE PARA CORRECCION	TRANSPORT GEAR FOR CORRECTION	
41	67.200-2391.1/00	BREMSHEBEL PALANCA DE FRENO	BRAKE LEVER	
42	483634-000.6/00	ZUGFEDER MUELLE TENSOR	TENSION SPRING	
43	034235-000.6/00	SCHEIBE GEPRICKELT ARANDELA PRENSADA	WASHER HAMMERED	
44	012526-000.6/00	ZYLINDERSCHRAUBE TORNILLO CILINDRICO M3X4	PAN-HEADED SCREW M3X4	

3.3 Farbbandtransport, Korrektureinrichtung
Ribbon transport, Correction device
Avance du ruban, Bande de correction
Transporte de cinta, Dispositivo de corrección

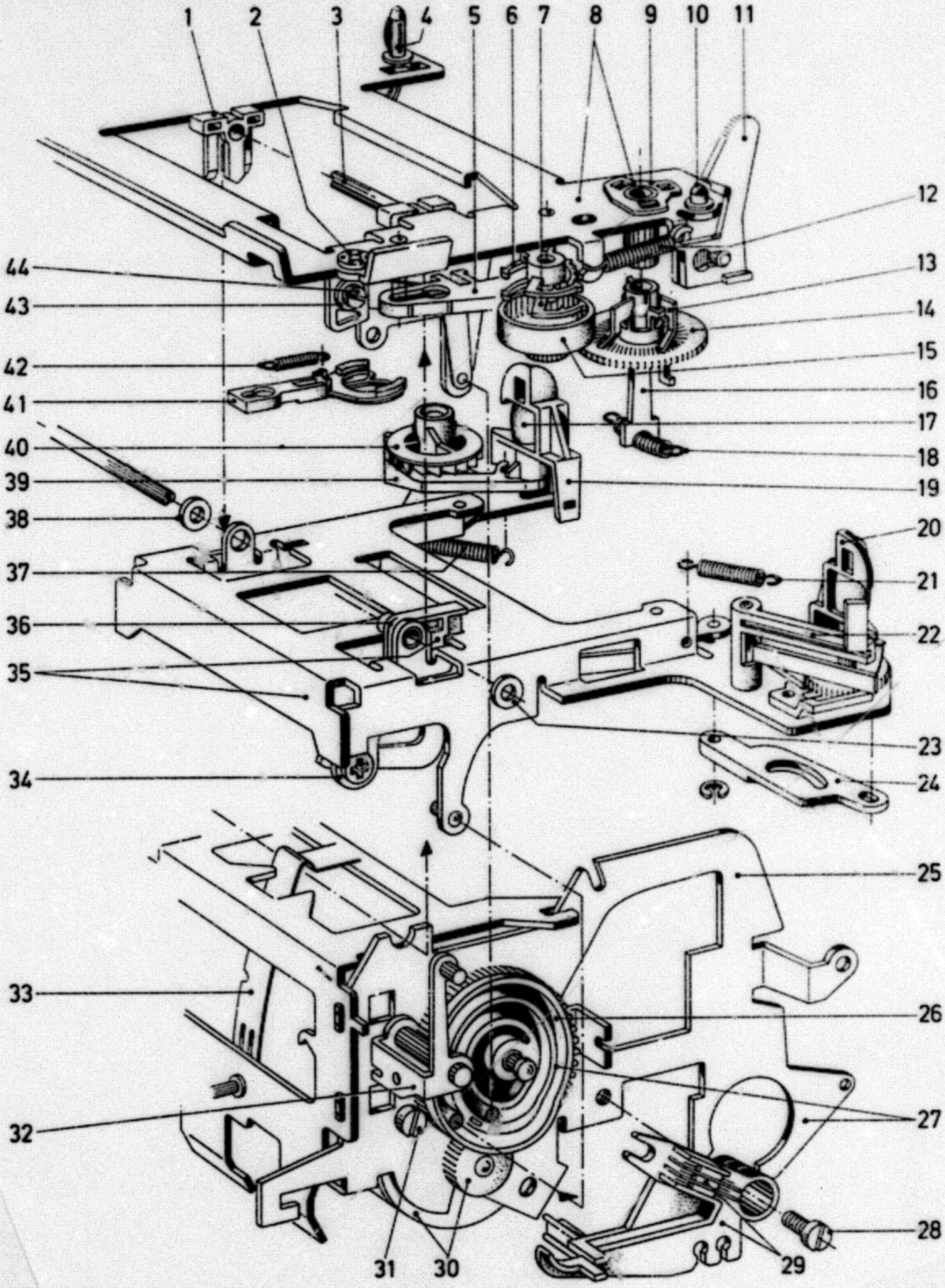

C24

3. Druckwerk/Printer

Bloc d'impression/Unidad impresora

3.4 Druckwerkleiterplatte
Printer pcb
Platine mecanisme d'impression
Placa de unidad impresora

Pos.-Nr./Bauteil Pos. no./Comp.	Bestell-Nr. Ref. no.	Benennung Deutsch Denominación Español	Term English	Farbe Color
1	67.200-2430.2/00	DRUCKWERKS-LEITERPLATTE KPL. PLACA DE UNIDAD IMPRESORA CPL.	PRINTER PCB ASSY.	
GLS1,GLS2	671711-000.6/00	GABELLICHTSCHRANKE PALPACION OPTICA	LIGHT BARRIER	
R1,2,3	663454-120.6/00	KOSCHIWI 180 OHM 5% 1/8W RESISTENCIA DE CARBON 180 OHM 5% 1/8W	CARBON RESISTOR 180 OHM 5% 1/8W	
St1	562457-020.6/00	STIFTLEISTE 20 POLIG CONECTOR 20 TERMINALES	CONNECTOR STRIP 20 POLE	
St2	562354-004.6/00	STIFTLEISTE 4 POLIG CONECTOR 4 TERMINALES	CONNECTOR STRIP 4 POLE	
St3	562354-003.6/00	STIFTLEISTE 3 POLIG CONECTOR 3 TERMINALES	CONNECTOR STRIP 3 POLE	
St5	562354-002.6/00	STIFTLEISTE 2 POLIG CONECTOR 2 TERMINALES	CONNECTOR STRIP 2 POLE	
St6	562354-004.6/00	STIFTLEISTE 4 POLIG CONECTOR 4 TERMINALES	CONNECTOR STRIP 4 POLE	
St7	562354-003.6/00	STIFTLEISTE 3 POLIG CONECTOR 3 TERMINALES	CONNECTOR STRIP 3 POLE	
St8	562354-002.6/00	STIFTLEISTE 2 POLIG CONECTOR 2 TERMINALES	CONNECTOR STRIP 2 POLE	

3.4 Druckwerksleiterplatte
Printer pcb
Platine mecanisme d'impression
Placa de unidad impresora

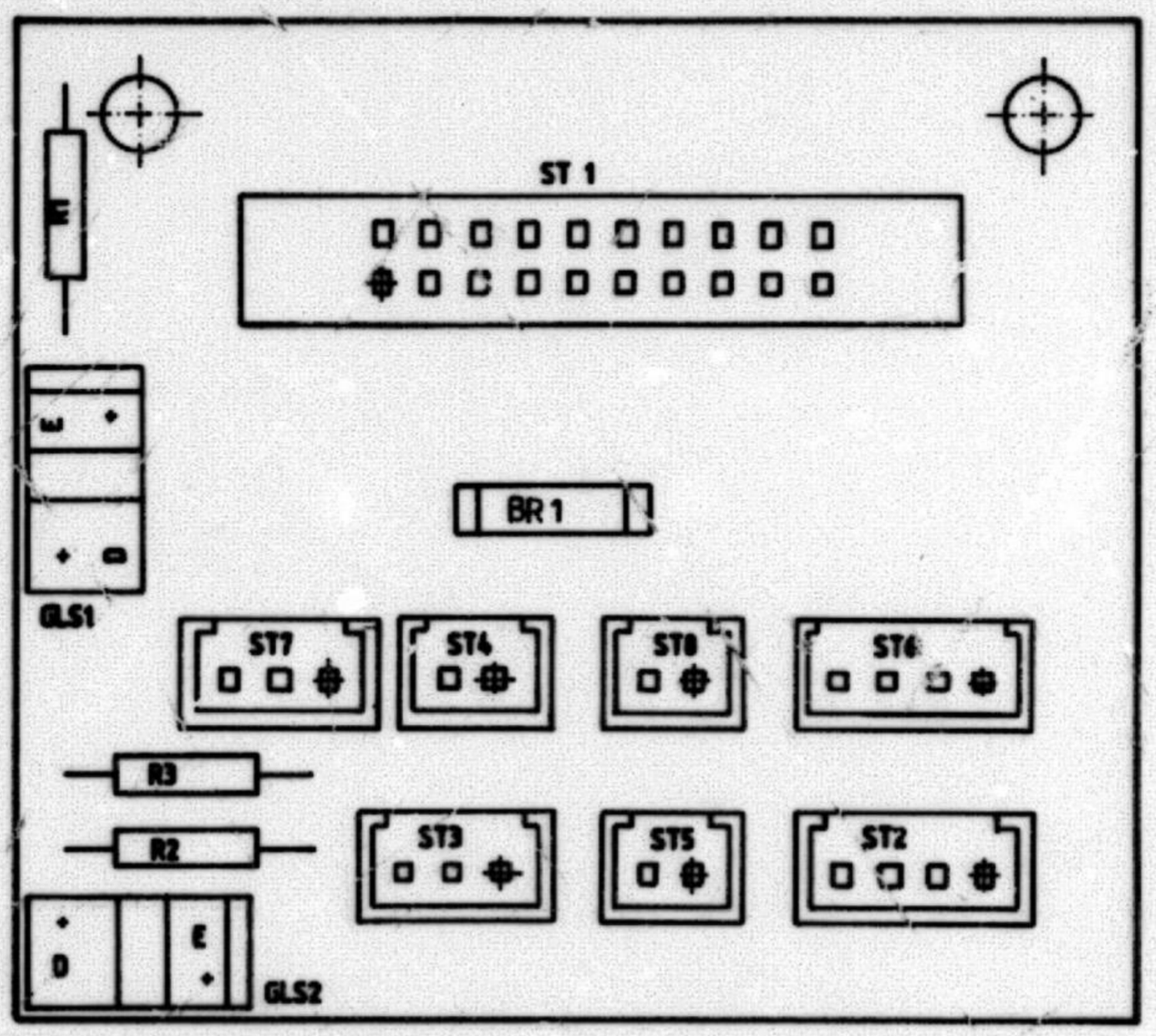

4. Stromversorgung/Power supply
Alimentation/Alimentación

4.1 Stromversorgung
Power supply
Alimentation
Alimentación

Pos.-Nr./Bauteil Pos. no./Comp.	Restell-Nr. Ref. no.	Benennung Deutsch Denominación Español	Term English	Farbe Color
1	563507-000.6/00	SPANNUNGSUMSCHALTER 110/220V SELECTOR 110/220V	VOLTAGE SWITCH 110/220V	
2	67.200-3513.1/00	DAEMPFUNGSPLATTE PLACA AMORTIGUADORA	DAMPING PLATE	
3	67.200-3500.5/00	REP.-NETZTEIL 220/240V 50HZ FUENTE DE ALIMENTACION REPARADA 220/240V 50HZ	EXCH. POWER PACK 220/240V 50HZ	
4	675936-000.6/00	KUEHLKOERPER DISIPADOR DE CALOR	HEAT SINK	
5	67.200-3540.2/00	FLACHBANDKABEL 12 POLIG MANGUERA PLANA 12 TERMINALES	FLAT CABLE 12 POLE	
6	67.200-3541.1/00	ISOLIERKAPPE CAPA AISLANTE	ISOLATING CAP	
7	542501-000.6/00	NETZSCHALTER INTERRUPTOR DE RED	SWITCH	
8	562597-000.6/00	GERAETESTECKER TOMA DE RED	APPLIANCE PLUG	
C1	67.001-3519.1/00	MKP-KONDENSATOR 1,55UF 660V CONDENSADOR "MCP" 1,55UF 660V	MCP CONDENSER 1,55UF 660V	
C2	661750-000.6/00	ENTSTOERKONDENS. 0,22UF 250V CONDENSADOR ANTIPARASITARIO 0,22UF 250V	INTERF. SUPPRESS. CONDENSER	
C3,4	661306-000.6/00	AL-ELKO 4700UF 40V CONDENSADOR ELECTROL. ALUM. 4700UF 40V	CONDENSER	
C5,6	661307-000.6/00	ELKO 15000UF 10V CONDENSADOR ELECTROLITICO 15000UF 10V	ELECTR. CONDENSER 15000UF 10V	
C7	662440-000.6/00	KONDENSATOR 0,33UF 50V CONDENSADOR 0,33UF 50V	CONDENSER 0,33UF 50V	
DR1,2	695122-000.6/00	FUNK-ENTSTOERDROSSEL BOBINA ANTIPARASITARIA	INTERFERENCE SUPPRESSION CHOKE	
GR1	674312-000.6/00	GLEICHRICHTER B40C1500/1000 RECTIFICADOR B40C1500/1000	RECTIFIER B40C1500/1000	
GR2	674317-000.6/00	GLEICHRICHTER B40C3700/2200 RECTIFICADOR B40C3700/2200	RECTIFIER B40C3700/2200	
IS1	66.200-3528.1/00	SPANNUNGSREGLER REGULADOR DE TENSION	VOLTAGE REGULATOR	
O.ILLUSTR.	577918-000.6/03	MASSEBAND CABLE DE MASA	GROUND CABLE	
R1	663692-320.6/00	KOSCHWI 6,8KOHM 5% 1/4W RESISTENCIA DE CARBON 6,8KOHM 5% 1/4W	CARBON RESISTOR 6,8KOHM 5% 1/4W	
SI2	666468-300.6/00	SICHERUNG 1,6A T FUSIBLE 1,6A T	FUSE 1,6A T	
SI3	666472-300.6/00	SICHERUNG 4A T FUSIBLE 4A T	FUSE 4A T	
TF	666407-000.6/00	THERMOSICHERUNG FUSIBLE TERMICO	THERMAL FUSE	
TR1	66.200-3515.2/00	TRANSFORMATOR 110/220V 50HZ TRANSFORMADOR 110/220V 50HZ	TRANSFORMER 110/220V 50HZ	
TR2	66.200-3516.2/00	TRANSFORMATOR 110/220V 60HZ TRANSFORMADOR 110/220V 60HZ	TRANSFORMER 110/220V 60HZ	

4. Stromversorgung/Power supply
Alimentation/Alimentación

4.1 Stromversorgung
Power supply
Alimentation
Alimentación

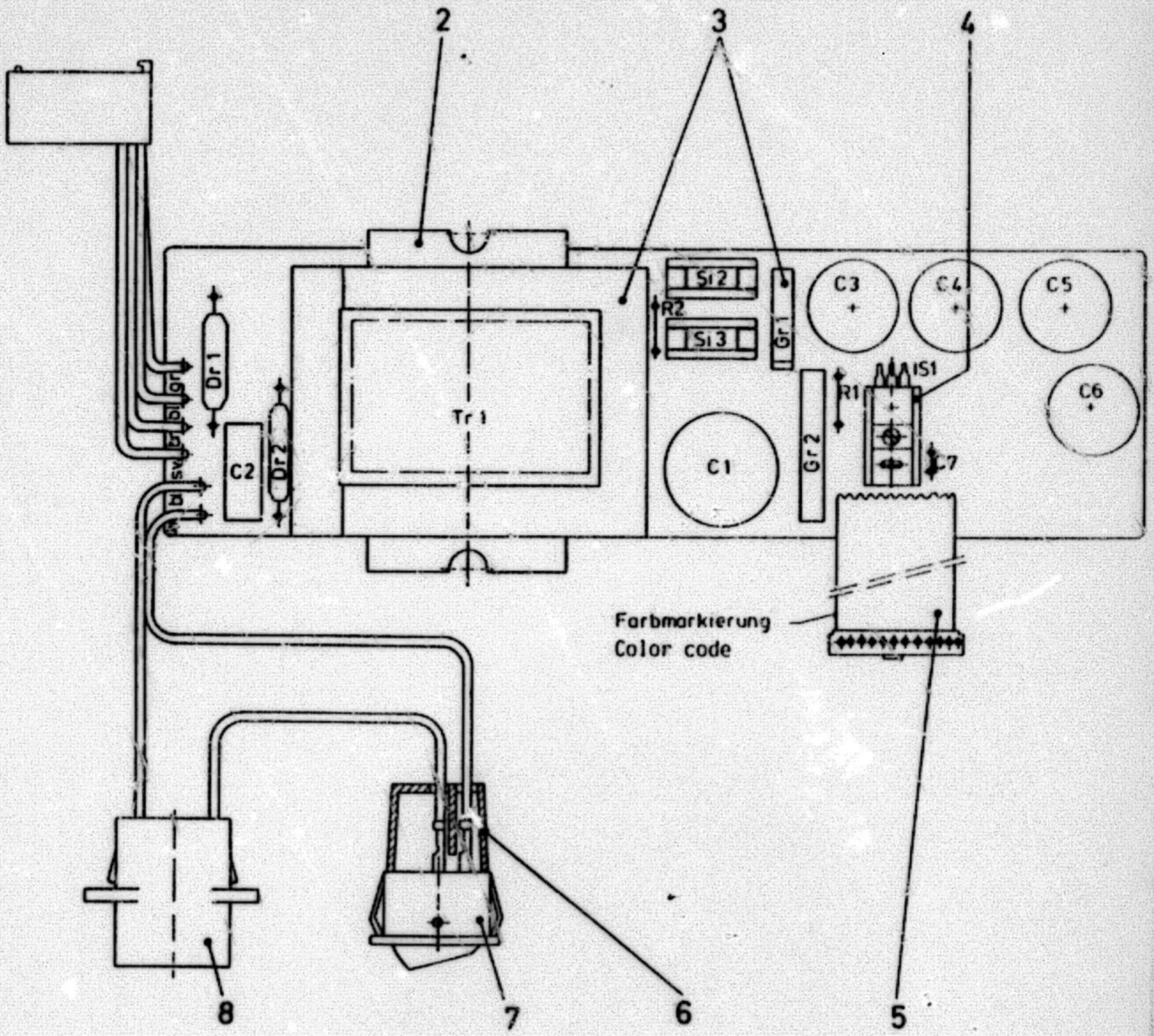

Ersatzteilkatalog
Spare parts catalog
Catalogue de pièces de rechange
Catálogo de Repuestos

AEG
OLYMPIA

ESW 2000/2000C/2000i/2500i

Service Department

Inhalt

		Seite	Fiche
10.3	Schnittstelle RS232C FIFO/ Interface RS232C FIFO Jonction RS232C FIFO/ Interface RS232C FIFO	10-003	E8
10.4	Schnittstelle IEC-BUS/ Interface IEC-BUS Jonction IEC-BUS/ Interface IEC-BUS	10-004	E11
11.	**OLYMPIA Schnittstellen/**OLYMPIA interfaces OLYMPIA jonctions/OLYMPIA interfaces		
11.1	Schnittstelle RS232C-CENTRONICS/ Interface RS232C-CENTRONICS Jonction RS232C-CENTRONICS/ Interface RS232C-CENTRONICS	11-001	E14
12.	**Transportsicherungen/**Transport safety device Transport verrouillage sécurité/Protecciones para transporte		
12.1	Transportsicherungen/ Transport safety device Transport verrouillage sécurité/ Protecciones para transporte	12-001	E20

4. Stromversorgung/Power supply
Alimentation/Alimentación

4.2 Stromversorgung (Ab Masch. 162478)
Power supply (W.E.F. Masch. 162478)
Alimentation (A partir Masch. 162478)
Alimentación (Desde Masch. 162478)

Pos.-Nr./Bauteil Pos. no./Comp.	Bestell-Nr. Ref. no.	Benennung Deutsch Denominación Español	Term English	Farbe Color
1	563507-000.6/00	SPANNUNGSUMSCHALTER 110/220V SELECTOR DE TENSION 110/220V	VOLTAGE SWITCH 110/220V	
2	67.200-3513.1/00	DAEMPFUNGSPLATTE PLACA AMORTIGUADORA	DAMPING PLATE	
3	67.300-3500.2/00	NETZTEIL KPL. 220/240V 50HZ FUENTE DE ALIMENTACION CPL. 220/240V 50HZ	POWER PACK ASSY. 220/240V 50HZ	
3	67.300-3500.5/01	REP.-NETZTEIL 220/240V 50HZ FUENTE DE ALIMENTACION REPARADA 220/240V 50HZ	EXCH. POWER PACK 220/240V 50HZ	
3	67.300-3501.2/00	NETZTEIL 110/220V 50HZ FUENTE DE ALIMENTACION CPL. 110/220V 50HZ	POWER PACK 110/220V 50HZ	
3	67.300-3502.2/00	NETZTEIL 110/220V 60HZ FUENTE DE ALIMENTACION CPL. 110/220V 60HZ	POWER PACK 110/220V 60HZ	
3	67.300-3503.2/00	NETZTEIL KPL. 120V 60HZ FUENTE DE ALIMENTACION CPL. 120V 60HZ	POWER PACK ASSY. 120V 60HZ	
4	675936-000.6/00	KUEHLKOERPER DISIPADOR DE CALOR	HEAT SINK	
5	577918-000.8/01	MASSEBAND CABLE DE MASA	GROUND CABLE	
6	67.300-3548.2/00	FLACHBANDKABEL 12 POLIG MANGUERA PLANA 12 TERMINALES	FLAT CABLE 12 POLE	
7	67.200-3541.1/00	ISOLIERKAPPE CAPA AISLANTE	ISOLATING CAP	
8	542501-000.6/00	NETZSCHALTER INTERRUPTOR DE RED	SWITCH	
9	562597-000.6/00	GERAETESTECKER TOMA DE RED	APPLIANCE PLUG	
C1	67.001-3519.1/00	MKP-KONDENSATOR 1,55UF 660V CONDENSADOR "MCP" 1,55UF 660V	MCP CONDENSER 1,55UF 660V	
C2	661750-000.6/00	ENTSTOERKONDENS. 0,22UF 250V CONDENSADOR ANTIPARASITARIO 0,22UF 250V	INTERF. SUPPRESS. CONDENSER	
C3	661306-000.6/00	AL-ELKO 4700UF 40V CONDENSADOR ELECTROL. ALUM. 4700UF 40V	CONDENSER	
C4,C5,C6,C11	661307-000.6/00	ELKO 15000UF 10V CONDENSADOR ELECTROLITICO 15000UF 10V	ELECTR. CONDENSER 15000UF 10V	
C7,C8	662440-000.6/00	KONDENSATOR 0,33UF 50V CONDENSADOR 0,33UF 50V	CONDENSER 0,33UF 50V	
C9,C10	662951-000.6/00	TA-ELKO 100UF 10V CONDENSADOR ELECTROL. TANTALO 100UF 10V	CONDENSER 100UF 10V	
D1-4	672114-000.6/00	DIODE 1N4002 DIODO 1N4002	DIODE 1N4002	
D5	672368-000.6/00	Z-DIODE BZX55B5V6 5,6V DIODO ZENER BZX55B5V6 5,6V	Z DIODE BZX55B5V6 5,6V	
D6	672100-000.6/00	DIODE 1N4148 DIODO 1N4148	DIODE 1N4148	

4.2 Stromversorgung (Ab Masch. 162478)
Power supply (W.E.F. Masch. 162478)
Alimentation (A partir Masch. 162478)
Alimentaciòn (Desde Masch. 162478)

Pos.-Nr./Bauteil Pos. no./Comp.	Bestell-Nr. Ref. no.	Benennung Deutsch Denominaciòn Español	Term English	Farbe Color
DR1,2	695122-000.6/00	FUNK-ENTSTOERDROSSEL BOBINA ANTIPARASITARIA	INTERFERENCE SUPPRESSION CHOKE	
GR1	674319-000.6/00	GLEICHRICHTER B40BC5000/3300 RECTIFICADOR B40BC5000/3300	RECTIFIER B40BC5000/3300	
IS1,2	66.210-3527.2/00	SPANNUNGSREGLER REGULADOR DE TENSION	VOLTAGE REGULATOR	
O.ILLUSTR.	666581-000.6/00	SICHERUNGSHALTER PORTAFUSIBLE	FUSE HOLDER	
O.ILLUSTR.	67.166-3598.1/00	KUEHLBLECH F. GR1 CHAPA DISIPADORA DE CALOR PARA GR1	HEAT SINK	
R1	663692-320.6/00	KOSCHIWI 6,8KOHM 5% 1/4W RESISTENCIA DE CARBON 6,8KOHM 5% 1/4W	CARBON RESISTOR 6,8KOHM 5% 1/4W	
R2	663664-320.6/00	KOSCHIWI 470 OHM 5% 1/4W RESISTENCIA DE CARBON 470 OHM 5% 1/4W	CARBON RESISTOR 470 OHM 5% 1/4W	
R3	663656-320.6/00	KOSCHIWI 220 OHM 5% 1/4W RESISTENCIA DE CARBON 220 OHM 5% 1/4W	CARBON RESISTOR 220 OHM 5% 1/4W	
Si2	666468-300.6/00	SICHERUNG 1,6A T FUSIBLE 1,6A T	FUSE 1,6A T	
Si3	666472-300.6/00	SICHERUNG 4A T FUSIBLE 4A T	FUSE 4A T	
St2	562354-012.6/00	STIFTLEISTE 12 POLIG CONECTOR 12 TERMINALES	CONNECTOR STRIP 12 POLE	
St3	562354-004.6/00	STIFTLEISTE 4 POLIG CONECTOR 4 TERMINALES	CONNECTOR STRIP 4 POLE	
St4	561800-000.6/00	FLACHSTECKER CONECTOR PLANO 6,3	FLAT CONNECTOR	
St5	562467-002.6/00	STIFTLEISTE 2 POLIG CONECTOR 2 TERMINALES	CONNECTOR STRIP 2 POLE	
TF	666407-000.6/00	TEMPERATURSICHERUNG FUSIBLE TERMICO	THERMAL FUSE	
TR1	66.200-3515.2/00	TRANSFORMATOR 110/220V 50HZ TRANSFORMADOR 110/220V 50HZ	TRANSFORMER 110/220V 50HZ	
TR1	66.200-3516.2/00	TRANSFORMATOR 110/220V 60HZ TRANSFORMADOR 110/220V 60HZ	TRANSFORMER 110/220V 60HZ	

4. Stromversorgung/Power supply

Alimentation/Alimentaciòn

4.2 Stromversorgung (Ab Masch. 162478)

Power supply (W.E.F. Masch. 162478)
Alimentation (A partir Masch. 162478)
Alimentaciòn (Desde Masch. 162478)

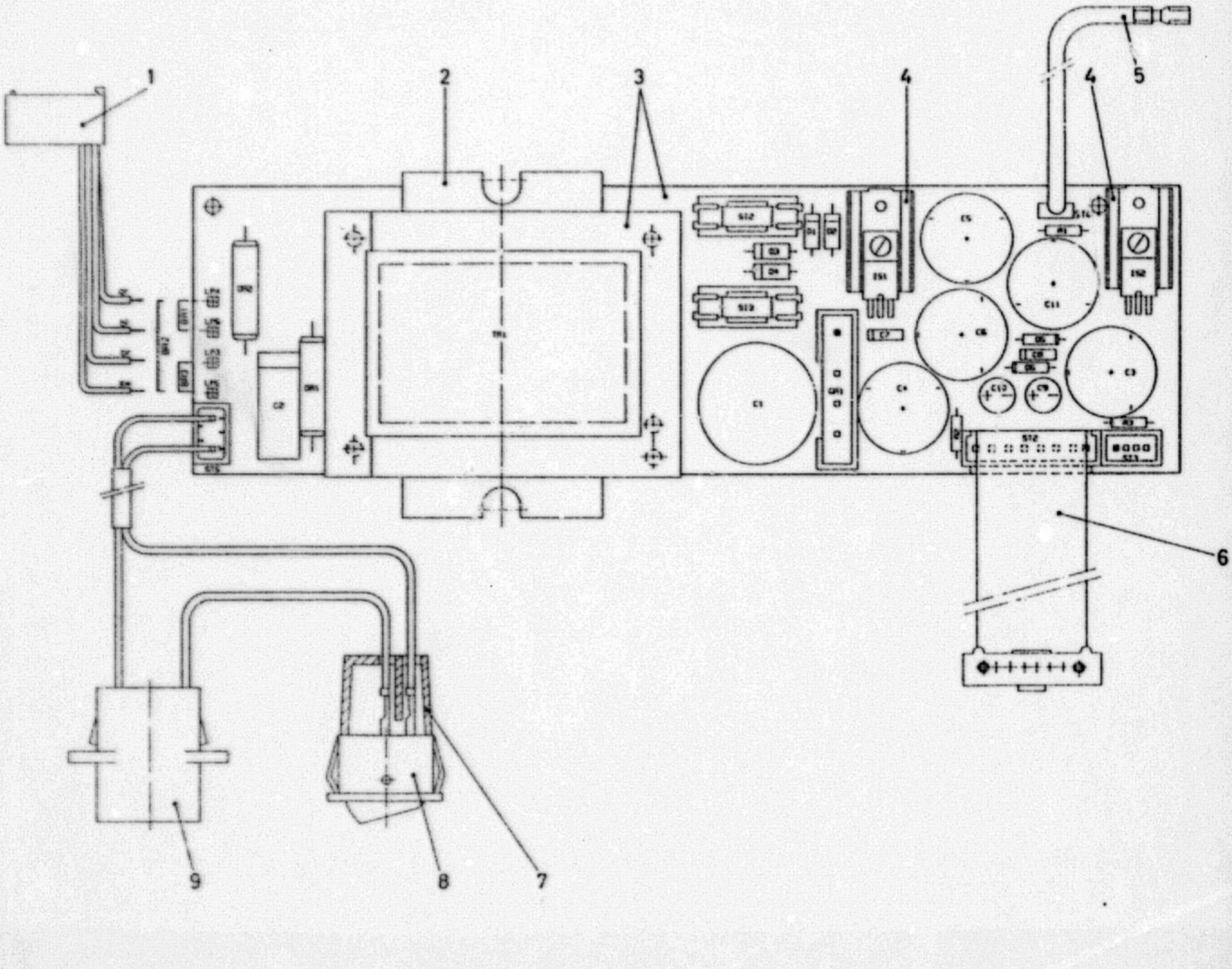

5. Elektronik/Electronics
Electronique/Electrònica

5.1 Steuerelektronik ESW 2000/2000C
Control electronics pcb ESW 2000/2000C
Plaque d'électronique ESW 2000/2000C
Placa electrònica de control ESW 2000/2000C

Pos.-Nr./Bauteil Pos. no./Comp.	Bestell-Nr. Ref. no.	Benennung Deutsch Denominación Español	Term English	Farbe Color
1	67.400-3002.2/00	STEUERELEKTRONIK KPL. PLACA ELECTRONICA DE CONTROL CPL.	CONTROL ELECTRONICS PCB ASSY.	
1	67.400-3002.5/00	REP.-STEUERELEKTRONIK PLACA ELECTRON. CONTROL REPARADA	EXCH. CONTROL PCB	
C10,11,12	662414-000.6/00	KER-KONDENSATOR 2,2NF 63V CONDENSADOR CERAMICO 2,2NF 63V	CERAMIC CONDENSER 2,2NF 63V	
C100,110,400,440	661227-000.6/00	TA-ELKO 2,2UF 25V CONDENSADOR 2,2UF 25V	CONDENSER 2,2UF 25V	
C101,103,120,130	662441-000.6/00	KER-KONDENSATOR 100NF 50V CONDENSADOR CERAMICO 100NF 50V	CERAMIC CONDENSER 100NF 50V	
C102,402	662463-000.6/00	KONDENSATOR 22NF 50V CONDENSADOR 22NF 50V	CONDENSER 22NF 50V	
C104,404	662413-000.6/00	KONDENSATOR 22PF 63V CONDENSADOR 22PF 63V	CONDENSER 22PF 63V	
C13,14,15,600	662440-000.6/00	KONDENSATOR 0,33UF 50V CONDENSADOR 0,33UF 50V	CONDENSER 0,33UF 50V	
C140,150,202,203	662441-000.6/00	KER-KONDENSATOR 100NF 50V CONDENSADOR CERAMICO 100NF 50V	CERAMIC CONDENSER 100NF 50V	
C200	662951-000.6/00	TA-ELKO 100UF 10V CONDENSADOR ELECTROL. TANTALO 100UF 10V	CONDENSER 100UF 10V	
C201	662407-000.6/00	MKT-KONDENSATOR 220NF 63V CONDENSADOR "MCT" 220NF 63V	CONDENSER 220NF 63V	
C300	661204-000.6/00	TA-KONDENSATOR 15UF 10V CONDENSADOR TANTALO 15UF 10V	TA. CONDENSER 15UF 10V	
C301,401,403,410	662441-000.6/00	KER-KONDENSATOR 100NF 50V CONDENSADOR CERAMICO 100NF 50V	CERAMIC CONDENSER 100NF 50V	
C41,412	662451-000.6/00	KONDENSATOR 0,01UF 50V CONDENSADOR 0,01UF 50V	CONDENSER 0,01UF 50V	
C420,430,431,450	662441-000.6/00	KER-KONDENSATOR 100NF 50V CONDENSADOR CERAMICO 100NF 50V	CERAMIC CONDENSER 100NF 50V	
C501,502	662441-000.6/00	KER-KONDENSATOR 100NF 50V CONDENSADOR CERAMICO 100NF 50V	CERAMIC CONDENSER 100NF 50V	
C503	662767-000.6/00	AL-ELKO 47UF 40V CONDENSADOR ELECTROL. ALUM. 47UF 40V	CONDENSER 47UF 40V	
C504	662482-000.6/00	KONDENSATOR 10NF 40V CONDENSADOR 10NF 40V	CONDENSER 10NF 40V	
C700,800,900	662440-000.6/00	KONDENSATOR 0,33UF 50V CONDENSADOR 0,33UF 50V	CONDENSER 0,33UF 50V	
D110-112,130,131	672100-000.6/00	DIODE 1N4148 DIODO 1N4148	DIODE 1N4148	
D200,301,302,450	672100-000.6/00	DIODE 1N4148 DIODO 1N4148	DIODE 1N4148	
D300	672325-000.6/00	Z-DIODE BZX55B6V2 6,2V DIODO ZENER BZX55B6V2 6,2V	Z DIODE BZX55B6V2 6,2V	

5.1 Steuerelektronik ESW 2000/2000C
Control electronics pcb ESW 2000/2000C
Plaque d'électronique ESW 2000/2000C
Placa electrònica de control ESW 2000/2000C

Pos.-Nr./Bauteil Pos. no./Comp.	Bestell-Nr. Ref. no.	Benennung Deutsch Denominación Español	Term English	Farbe Color
D500,601-608	672171-000.6/00	DIODE UF4001 DIODO UF4001	DIODE UF4001	
D600,700,800,900	672138-000.6/00	DIODE BY296 DIODO BY296	DIODE BY296	
D650	672347-000.6/00	Z-DIODE BZX85C43 43V DIODO ZENER BZX85C43 43V	Z DIODE BZX85C43 43V	
D701-708,D801-808	672171-000.6/00	DIODE UF4001 DIODO UF4001	DIODE UF4001	
D901-908	672171-000.6/00	DIODE UF4001 DIODO UF4001	DIODE UF4001	
IS10	676842-000.6/00	MIKROCOMPUTER 97501 MICROPROCESADOR 97501	MICROCOMPUTER 97501	
IS10	670911-045.8/04	8K-EPROM 2764 (N045/4) EPROM DE 8K 2764 (N045/4)	8K EPROM 2764 (N045/4)	
IS10	653320-011.6/04	EINCHIPRECHNER CPU PROGRAMADA 1CHIP WAHLWEISE/SELECTIVE	MASK-PROGRAMED CPU	
IS11	679700-000.6/00	2Kx8BIT-STATIK-RAM 5517 RAM ESTATICA 2KX8BIT 5517	2KX8BIT STATIC RAM 5517	
IS12	651240-054.8/00	4K-EPROM 2532 (1240-054/X) EPROM 4K 2532 (1240-054/X)	4K EPROM 2532 (1240-054/X)	
IS12	651240-056.8/00	4K-EPROM 2532 (1240-056/X) EPROM 4K 2532 (1240-056/X)	4K EPROM 2532 (1240-056/X)	
IS12	651240-058.8/00	4K-EPROM 2532 (1240-058/X) EPROM 4K 2532 (1240-058/X)	4K EPROM 2532 (1240-058/X)	
IS12	651240-052.8/00	4K-EPROM 2532 (1240-052/X) EPROM 4K 2532 (1240-052/X)	4K EPROM 2532 (1240-052/X)	
IS12	651240-057.8/00	4K-EPROM 2532 (1240-057/X) EPROM 4K 2532 (1240-057/X)	4K EPROM 2532 (1240-057/X)	
IS12	651240-051.8/00	4K-EPROM 2532 (1240-051/X) EPROM 4K 2532 (1240-051/X)	4K EPROM 2532 (1240-051/X)	
IS12	651240-048.8/00	4K-EPROM 2532 (1240-048(X) EPROM 4K 2532 (1240-048(X)	4K EPROM 2532 (1240-048(X)	
IS12	651240-044.8/00	4K-EPROM 2532 (1240-044/X) EPROM 4K 2532 (1240-044/X)	4K EPROM 2532 (1240-044/X)	
IS12	651240-043.8/00	4K-EPROM 2532 (1240-034/X) EPROM 4K 2532 (1240-034/X)	4K EPROM 2532 (1240-034/X)	
IS12	651240-049.8/00	4K-EPROM 2532 (1240-049/X) EPROM 4K 2532 (1240-049/X)	4K EPROM 2532 (1240-049/X)	
IS12	651240-047.8/00	4K-EPROM 2532 (1240-047/X) EPROM 4K 2532 (1240-047/X)	4K EPROM 2532 (1240-047/X)	
IS12	651240-046.8/00	4K-EPROM 2532 (1240-046/X) EPROM 4K 2532 (1240-046/X)	4K EPROM 2532 (1240-046/X)	

5. Elektronik/Electronics
Electronique/Electrònica

5.1 Steuerelektronik ESW 2000/2000C
Control electronics pcb ESW 2000/2000C
Plaque d'électronique ESW 2000/2000C
Placa electrònica de control ESW 2000/2000C

Pos.-Nr./Bautail Pos. no./Comp.	Bestell-Nr. Ref. no.	Benennung Deutsch Denominacibn Español	Term English	Farbe Color
IS12	651240-040.8/00	4K-EPROM 2532 (1240-040/X) EPROM 4K 2532 (1240-040/X)	4K EPROM 2532 (1240-040/X)	
IS12	651240-041.8/00	4K-EPROM 2532 (1240-041/X) EPROM 4K 2532 (1240-041/X)	4K EPROM 2532 (1240-041/X)	
IS12	651240-045.8/00	4K-EPROM 2532 (1240-045/X) EPROM 4K 2532 (1240-045/X)	4K EPROM 2532 (1240-045/X)	
IS12	651240-053.8/00	4K-EPROM 2532 (1240-053/X) EPROM 4K 2532 (1240-053/X)	4K EPROM 2532 (1240-053/X)	
IS12	651240-055.8/00	4K-EPROM 2532 (1240-055/X) EPROM 4K 2532 (1240-055/X)	4K EPROM 2532 (1240-055/X)	
IS12	651240-042.8/00	4K-EPROM 2532 (1240-042/X) EPROM 4K 2532 (1240-042/X)	4K EPROM 2532 (1240-042/X)	
IS12	651240-085.8/00	4K-EPROM 2532 (1240-085/X) EPROM 4K 2532 (1240-085/X)	4K EPROM 2532 (1240-085/X)	
IS12	651240-081.8/00	4K-EPROM 2532 (1240-081/X) EPROM 4K 2532 (1240-081/X)	4K EPROM 2532 (1240-081/X)	
IS12	651240-084.8/00	4K-EPROM 2532 (1240-084/X) EPROM 4K 2532 (1240-084/X)	4K EPROM 2532 (1240-084/X)	
IS12	651240-080.8/00	2K-EPROM 2532 (1240-080/X) EPROM 2K 2532 (1240-080/X)	2K EPROM 2532 (1240-080/X)	
IS12	651240-082.8/00	4K-EPROM 2532 (1240-082/X) EPROM 4K 2532 (1240-082/X)	4K EPROM 2532 (1240-082/X)	
IS12	651240-083.8/00	4K-EPROM 2532 (1240-083/X) EPROM 4K 2532 (1240-083/X)	4K EPROM 2532 (1240-083/X)	
IS13	676204-000.6/00	3BIT-DEKODER 74LS138 DECODIFICADOR DE 3 BIT 74LS138	3BIT DECODER 74LS138	
IS14	676581-000.6/00	8FACH-BUS-TREIBER 74HC245 EXCITADOR BUS OCTUPLE 74HC245	8FOLD BUS DRIVER 74HC245	
IS15	676170-000.6/00	4FACH-NAND-GATTER 74LS03 PUERTA NAND CUADRUPLE 74LS03	4FOLD NAND GATE 74LS03	
IS20	676202-000.6/00	4FACH-NAND-GATTER 74LS00 PUERTA NAND CUADRUPLE 74LS00	4FOLD NAND GATE 74LS00	
IS40	676812-000.6/00	MIKROCOMPUTER 3780 MICROPROCESADOR 3780	MICROCOMPUTER 3780	
IS40	651240-037.8/00	4K EPROM 2532 (1240-037/X) 4K EPROM 2532 (1240-037/X)	4K EPROM 2532 (1240-037/X)	
IS40	653240-037.6/00	EINCHIPRECHNER CPU PROGRAMADA 1CHIP	MASK PROGRAMED CPU	
IS41	676340-000.6/00	8FACH-LATCH 74LS373 "LATCH" OCTUPLE 74LS373	8FOLD LATCH 74LS373	
IS42	676201-000.6/00	6FACH-INVERTER 74LS04 INVERSORA SEXTUPLE 74LS04	6FOLD INVERTER 74LS04	
IS43	676203-000.6/00	4FACH-NOR-GATTER 74LS02 PUERTA NOR CUADRUPLE 74LS02	4FOLD NOR GATE 74LS02	

5.1 Steuerelektronik ESW 2000/2000C
Control electronics pcb ESW 2000/2000C
Plaque d'électronique ESW 2000/2000C
Placa electrònica de control ESW 2000/2000C

Pos.-Nr./Bauteil Pos. no./Comp.	Bestell-Nr. Ref. no.	Benennung Deutsch Denominación Español	Term English	Farbe Color
IS44	676261-000.6/00	4FACH-EX-OR-GATTER 74LS86 PUERTA EX-OR CUADRUPLE 74LS86	4FOLD EX-OR GATE 74LS86	
IS50	676508-000.6/00	KOMPARATOR 311 COMPARADOR 311	COMPARATOR 311	
IS51	676737-000.6/00	SPANNUNGSREGLER 5V REGULADOR DE TENSION 5V	VOLTAGE REGULATOR 5V	
IS60,70,80,90	676568-000.6/00	2FACH-TREIBER L298 EXCITADOR DOBLE L298	2FOLD DRIVER L298	
LS20	698108-000.6/00	SCHALLGEBER GENERADOR ACUSTICO	BUZZER	
O.ILLUSTR.	012526-000.6/00	ZYLINDERSCHRAUBE TORNILLO CILINDRICO M3X4	PAN-HEADED SCREW M3X4	
O.ILLUSTR.	676981-000.6/00	SOCKEL 40 POLIG ZOCALO 40 TERMINALES	SOCKET 40 POLE	
O.ILLUSTR.	676986-000.6/00	SOCKEL 24 POLIG ZOCALO 24 TERMINALES	SOCKET 24 POLE	
O.ILLUSTR.	67.200-3040.1/00	KUEHLKOERPER DISIPADOR DE CALOR	HEAT SINK	
R100,133,205,303	663480-320.6/00	KOSCHIWI 2,2KOHM 5% 1/4W RESISTENCIA DE CARBON 2,2KOHM 5% 1/4W	RESISTOR 2,2KOHM 5% 1/4W	
R101,110-112,131	663496-320.6/00	KOSCHIWI 10KOHM 5% 1/4W RESISTENCIA DE CARBON 10KOHM 5% 1/4W	RESISTOR 10KOHM 5% 1/4W	
R113,130,400,501	663672-320.6/00	KOSCHIWI 1KOHM 5% 1/4W RESISTENCIA DE CARBON 1KOHM 5% 1/4W	RESISTOR 1KOHM 5% 1/4W	
R114	663444-120.6/00	KOSCHIWI 68 OHM 5% 1/8W RESISTENCIA DE CARBON 68 OHM 5% 1/8W	CARBON RESISTOR 68 OHM 5% 1/8W	
R132,150,411	663496-320.6/00	KOSCHIWI 10KOHM 5% 1/4W RESISTENCIA DE CARBON 10KOHM 5% 1/4W	RESISTOR 10KOHM 5% 1/4W	
R200,201,306	663674-320.6/00	KOSCHIWI 1,2KOHM 5% 1/4W RESISTENCIA DE CARBON 1,2KOHM 5% 1/4W	RESISTOR 1,2KOHM 5% 1/4W	
R202,602,702	663686-320.6/00	KOSCHIWI 3,9KOHM 5% 1/4W RESISTENCIA DE CARBON 3,9KOHM 5% 1/4W	RESISTOR 3,9KOHM 5% 1/4W	
R204	663638-320.6/00	KOSCHIWI 39 OHM 5% 1/4W RESISTENCIA DE CARBON 39 OHM 5% 1/4W	RESISTOR 39 OHM 5% 1/4W	
R300-302	663658-320.6/00	KOSCHIWI 270 OHM 5% 1/4W RESISTENCIA DE CARBON 270 OHM 5% 1/4W	RESISTOR 270 OHM 5% 1/4W	
R304,600,700	663694-320.6/00	KOSCHIWI 8,2KOHM 5% 1/4W RESISTENCIA DE CARBON 8,2KOHM 5% 1/4W	RESISTOR 8,2KOHM 5% 1/4W	
R305,307,503	663480-320.6/00	KOSCHIWI 2,2KOHM 5% 1/4W RESISTENCIA DE CARBON 2,2KOHM 5% 1/4W	RESISTOR 2,2KOHM 5% 1/4W	
R410	663448-320.6/00	KOSCHIWI 100 OHM 5% 1/4W RESISTENCIA DE CARBON 100 OHM 5% 1/4W	RESISTOR 100 OHM 5% 1/4W	
R450	663689-320.6/00	KOSCHIWI 5,1KOHM 5% 1/4W RESISTENCIA DE CARBON 5,1KOHM 5% 1/4W	RESISTOR 5,1KOHM 5% 1/4W	

5.1 Steuerelektronik ESW 2000/2000C
Control electronics pcb ESW 2000/2000C
Plaque d'électronique ESW 2000/2000C
Placa electrònica de control ESW 2000/2000C

Pos.-Nr./Beutel Pos. no./Comp.	Bestell-Nr. Ref. no.	Benennung Deutsch Denominacibn Español	Term English	Farbe Color
R500,508	663496-320.6/00	KOSCHIWI 10KOHM 5% 1/4W RESISTENCIA DE CARBON 10KOHM 5% 1/4W	RESISTOR 10KOHM 5% 1/4W	
R504,507,509	663480-320.6/00	KOSCHIWI 2,2KOHM 5% 1/4W RESISTENCIA DE CARBON 2,2KOHM 5% 1/4W	RESISTOR 2,2KOHM 5% 1/4W	
R505	665801-015.6/00	WIDERSTAND 0,22 OHM 1/4W RESISTENCIA 0,22 OHM 1/4W	RESISTOR 0,22 OHM 1/4W	
R506	663408-120.6/00	KOSCHIWI 2,2 OHM 5% 1/4W RESISTENCIA DE CARBON 2,2 OHM 5% 1/4W	RESISTOR 2,2 OHM 5% 1/4W	
R510	663823-000.6/00	POTENTIOMETER 1KOHM POTENCIOMETRO 1KOHM	POTENTIOMETER 1KOHM	
R601,701,801,901	663704-320.6/00	KOSCHIWI 22KOHM 5% 1/4W RESISTENCIA DE CARBON 22KOHM 5% 1/4W	CARBON RESISTOR 22KOHM 5% 1/4W	
R704,904	663052-000.6/00	DRAHTWIDERSTAND 4,7 OHM 2W RESISTENCIA BOBINADA 4,7 OHM 2W	RESISTOR 4,7 OHM 2W	
R800,900	663694-320.6/00	KOSCHIWI 8,2KOHM 5% 1/4W RESISTENCIA DE CARBON 8,2KOHM 5% 1/4W	RESISTOR 8,2KOHM 5% 1/4W	
R802,902	663686-320.6/00	KOSCHIWI 3,9KOHM 5% 1/4W RESISTENCIA DE CARBON 3,9KOHM 5% 1/4W	RESISTOR 3,9KOHM 5% 1/4W	
RN1,11,14	677166-000.6/00	R-NETZWERK 8X10KOHM JUEGO DE RESISTENCIAS 8X10KOHM	RESISTOR ARRAY 8X10KOHM	
St1	562354-012.6/00	STIFTLEISTE 12 POLIG CONECTOR 12 TERMINALES	CONNECTOR STRIP 12 POLE	
St10,14,43	562457-020.6/00	STIFTLEISTE 20 POLIG CONECTOR 20 TERMINALES	CONNECTOR STRIP 20 POLE	
St2	561800-000.6/00	FLACHSTECKER CONECTOR PLANO	FLAT CONNECTOR	
St40	562354-003.6/00	STIFTLEISTE 3 POLIG CONECTOR 3 TERMINALES	CONNECTOR STRIP 3 POLE	
St41	562354-004.6/00	STIFTLEISTE 4 POLIG CONECTOR 4 TERMINALES	CONNECTOR STRIP 4 POLE	
St45	562354-005.6/00	STIFTLEISTE 5 POLIG CONECTOR 5 TERMINALES	CONNECTOR STRIP 5 POLE	
St60,70	562354-004.6/00	STIFTLEISTE 4 POLIG CONECTOR 4 TERMINALES	CONNECTOR STRIP 4 POLE	
Ts10,11,31-33	675143-000.6/00	TRANSISTOR BC237A TRANSISTOR BC237A	TRANSISTOR BC237A	
Ts20,41	675182-000.6/00	TRANSISTOR BC337 TRANSISTOR BC337	TRANSISTOR BC337	
Ts30	675144-000.6/00	TRANSISTOR BC327 TRANSISTOR BC327	TRANSISTOR BC327	
Ts45	675252-000.6/00	TRANSISTOR TIP112 TRANSISTOR TIP112	TRANSISTOR TIP112	
Ts50	675273-000.6/00	TRANSISTOR BD646 TRANSISTOR BD646	TRANSISTOR BD646	

5.1 Steuerelektronik ESW 2000/2000C
Control electronics pcb ESW 2000/2000C
Plaque d'électronique ESW 2000/2000C
Placa electrònica de control ESW 2000/2000C

Pos.-Nr./Bauteil Pos. no./Comp.	Bestell-Nr. Ref. no.	Benennung Deutsch Denominación Español	Term English	Farbe Color
Ts51,61,71,81,91	675143-000.6/00	TRANSISTOR BC237A TRANSISTOR BC237A	TRANSISTOR BC237A	
Ts60,70,80,90	675210-000.6/00	TRANSISTOR TIP125 TRANSISTOR TIP125	TRANSISTOR TIP125	
XT40,40	698510-000.6/00	QUARZ 4,0000MHZ OSCILADOR DE CUARZO 4,0000MHZ	QUARTZ 4,0000MHZ	

5.1 Steuerelektronik ESW 2000/2000C
Control electronics pcb ESW 2000/2000C
Plaque d'électronique ESW 2000/2000C
Placa electrònica de control ESW 2000/2000C

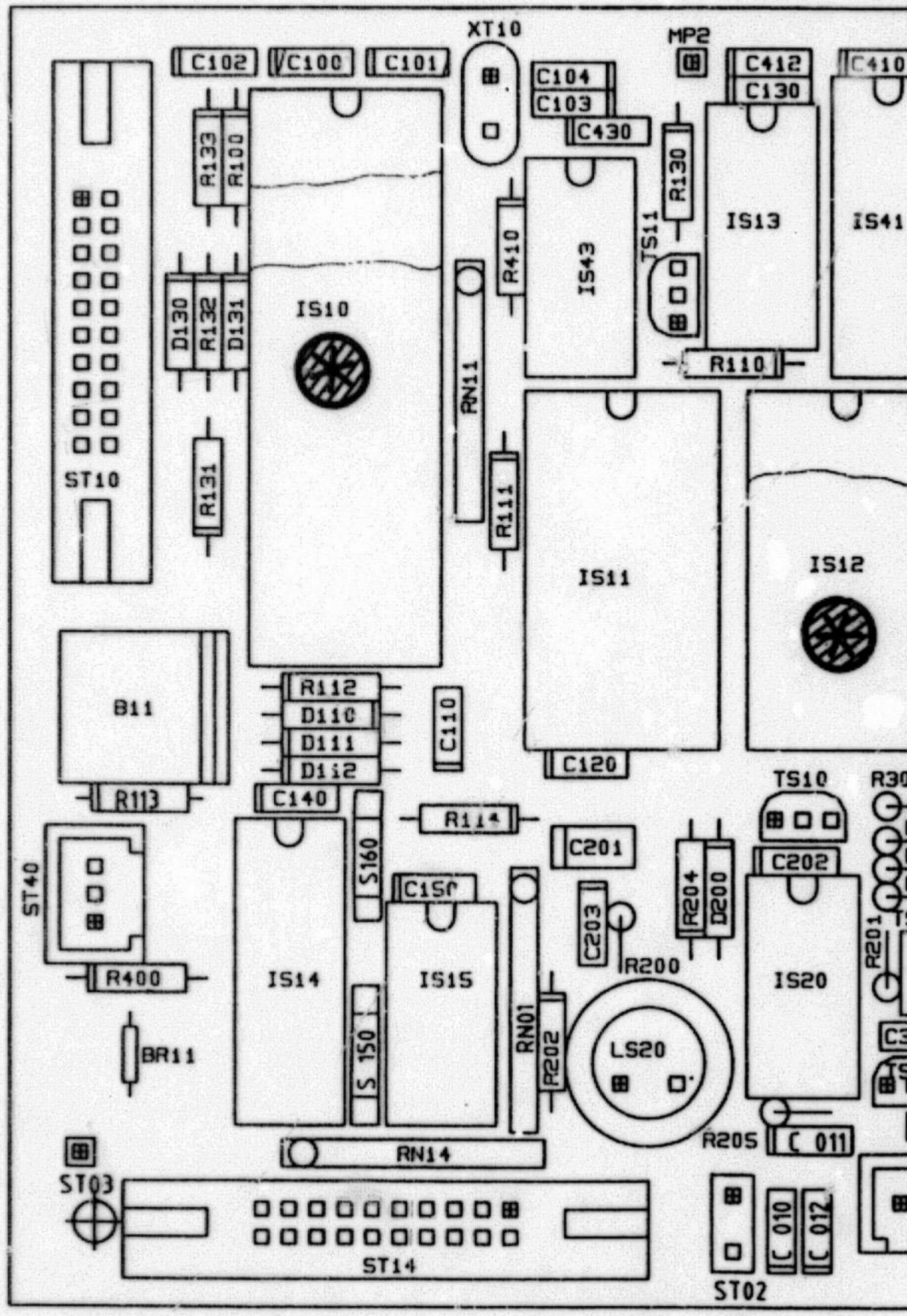

= Im Lieferumfang e
Not included in th
No se suministra c

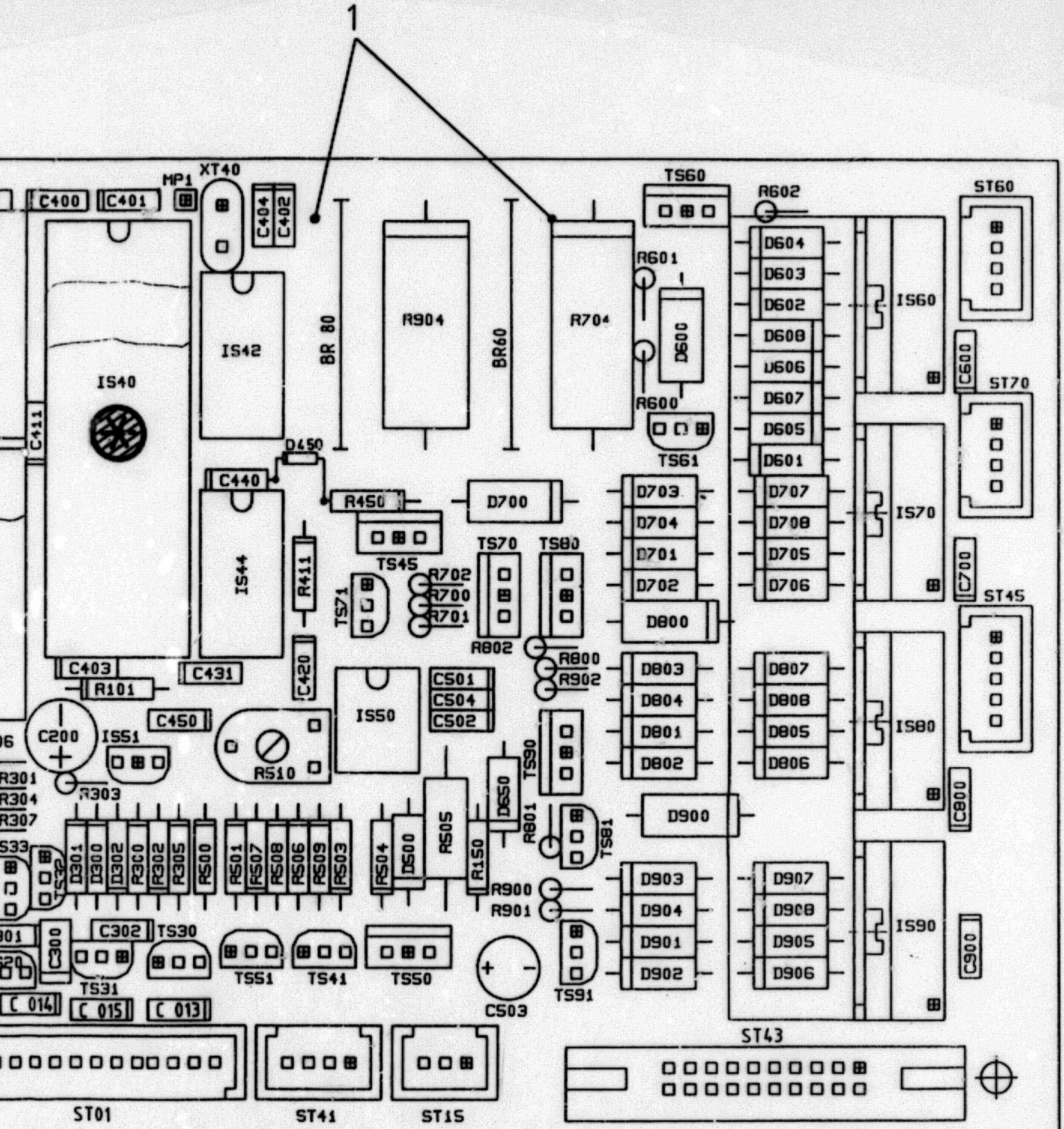

der Leiterplatte nicht enthalten. Vor Einsendung als Austauschteil entfernen.
e scope of delivery of the PCB. Remove before returning as an exchange assembly.
con la placa electrónica. Hay que retirar la pieza antes de enviar la placa.

5.2 Steuerelektronik ESW 2000i
Control electronics pcb ESW 2000i
Plaque d'électronique ESW 2000i
Placa electrònica de control ESW 2000i

Pos.-Nr./Bauteil Pos. no./Comp.	Bestell-Nr. Ref. no.	Benennung Deutsch Denominacibn Español	Term English	Farbe Color
1	67.401-3002.2/00	STEUERELEKTRONIK KPL. PLACA ELECTRONICA DE CONTROL CPL.	CONTROL ELECTRONICS PCB ASSY.	
1	67.401-3002.5/00	REP.-STEUERELEKTRONIK PLACA ELECTRON. CONTROL REPARADA	EXCH. CONTROL PCB	
503,504,507,509	663480-320.6/00	KOSCHIWI 2,2KOHM 5% 1/4W RESISTENCIA DE CARBON 2,2KOHM 5% 1/4W	RESISTOR 2,2KOHM 5% 1/4W	
C100,400	661227-000.6/00	TA-ELKO 2,2UF 25V CONDENSADOR 2,2UF 25V	CONDENSER 2,2UF 25V	
C101,103,130,140	662441-000.6/00	KER-KONDENSATOR 100NF 50V CONDENSADOR CERAMICO 100NF 50V	CERAMIC CONDENSER 100NF 50V	
C102,402	662482-000.6/00	KONDENSATOR 10NF 40V CONDENSADOR 10NF 40V	CONDENSER 10NF 40V	
C104,105,404,405	662428-000.6/00	KONDENSATOR 33PF 63V CONDENSADOR 33PF 63V	CONDENSER 33PF 63V	
C13-15,600,700	662440-000.6/00	KONDENSATOR 0,33UF 50V CONDENSADOR 0,33UF 50V	CONDENSER 0,33UF 50V	
C150,202,203,401	662441-000.6/00	KER-KONDENSATOR 100NF 50V CONDENSADOR CERAMICO 100NF 50V	CERAMIC CONDENSER 100NF 50V	
C200	662951-000.6/00	TA-ELKO 100UF 10V CONDENSADOR ELECTROL. TANTALO 100UF 10V	CONDENSER 100UF 10V	
C201	662407-000.6/00	MKT-KONDENSATOR 220NF 63V CONDENSADOR "MCT" 220NF 63V	CONDENSER 220NF 63V	
C300	661204-000.6/00	KONDENSATOR 220PF 500V CONDENSADOR 220PF 500V	CONDENSER 220PF 500V	
C403,410,420,430	662441-000.6/00	KER-KONDENSATOR 100NF 50V CONDENSADOR CERAMICO 100NF 50V	CERAMIC CONDENSER 100NF 50V	
C411,412	662451-000.6/00	KONDENSATOR 0,01UF 50V CONDENSADOR 0,01UF 50V	CONDENSER 0,01UF 50V	
C501,502,301,431	662441-000.6/00	KER-KONDENSATOR 100NF 50V CONDENSADOR CERAMICO 100NF 50V	CERAMIC CONDENSER 100NF 50V	
C503	662767-000.6/00	AL-ELKO 47UF 40V CONDENSADOR ELECTROL. ALUM. 47UF 40V	CONDENSER 47UF 40V	
C800,900	662440-000.6/00	KONDENSATOR 0,33UF 50V CONDENSADOR 0,33UF 50V	CONDENSER 0,33UF 50V	
C901,908	672171-000.6/00	DIODE UF4001 DIODO UF4001	DIODE UF4001	
D130,200,301	672100-000.6/00	DIODE 1N4148 DIODO 1N4148	DIODE 1N4148	
D300	672325-000.6/00	Z-DIODE BZX55B6V2 6,2V DIODO ZENER BZX55B6V2 6,2V	Z DIODE BZX55B6V2 6,2V	
D302,450	672100-000.6/00	DIODE 1N4148 DIODO 1N4148	DIODE 1N4148	
D500,601,608,701	672171-000.6/00	DIODE UF4001 DIODO UF4001	DIODE UF4001	

5.2 Steuerelektronik ESW 2000I
Control electronics pcb ESW 2000i
Plaque d'électronique ESW 2000i
Placa electrònica de control ESW 2000i

Pos.-Nr./Bauteil Pos. no./Comp.	Bestell-Nr. Ref. no.	Benennung Deutsch Denominacibn Español	Term English	Farbe Color
D600,700,800,900	672138-000.6/00	DIODE BY296 DIODO BY296	DIODE BY296	
D650	672347-000.6/00	Z-DIODE BZX85C43 43V DIODO ZENER BZX85C43 43V	Z DIODE BZX85C43 43V	
D708,801,808	672171-000.6/00	DIODE UF4001 DIODO UF4001	DIODE UF4001	
IS10	651240-090.8/01	4K-EPROM 2532 (1249-090/1) EPROM DE 4K 2532 (1249-090/1)	4K EPROM 2532 (1249-090/1)	
IS10	653240-090.8/00	EINCHIPRECHNER CPU PROGRAMADA 1CHIP	MASK PROGRAMED CPU	
IS10,40	676812-000.6/00	MIKROCOMPUTER 3780 MICROPROCESADOR 3780	MICROCOMPUTER 3780	
IS13	676204-000.6/00	3BIT-DEKODER 74LS138 DECODIFICADOR DE 3 BIT 74LS138	3BIT DECODER 74LS138	
IS14	676581-000.6/00	8FACH-BUS-TREIBER 74HC245 EXCITADOR BUS OCTUPLE 74HC245	8FOLD BUS DRIVER 74HC245	
IS15	676170-000.6/00	4FACH-NAND-GATTER 74LS03 PUERTA NAND CUADRUPLE 74LS03	4FOLD NAND GATE 74LS03	
IS20	676202-000.6/00	4FACH-NAND-GATTER 74LS00 PUERTA NAND CUADRUPLE 74LS00	4FOLD NAND GATE 74LS00	
IS40	651240-037.8/02	4K EPROM 2532 (1240-037/2) 4K EPROM 2532 (1240-037/2)	4K EPROM 2532 (1240-037/2)	
IS40	653240-037.6/00	EINCHIPRECHNER CPU PROGRAMADA 1CHIP	MASK PROGRAMED CPU	
IS41	676367-000.6/00	8FACH-LATCH 74HCT373 "LATCH" OCTUPLE 74HCT373	8FOLD LATCH 74HCT373	
IS42	676201-000.6/00	6FACH-INVERTER 74LS04 INVERSORA SEXTUPLE 74LS04	6FOLD INVERTER 74LS04	
IS43	676203-000.6/00	4FACH-NOR-GATTER 74LS02 PUERTA NOR CUADRUPLE 74LS02	4FOLD NOR GATE 74LS02	
IS44	676261-000.6/00	4FACH-EX-OR-GATTER 74LS86 PUERTA EX-OR CUADRUPLE 74LS86	4FOLD EX-OR GATE 74LS86	
IS50	676508-000.6/00	KOMPARATOR 311 COMPARADOR 311	COMPARATOR 311	
IS51	676737-000.6/00	SPANNUNGSREGLER 5V REGULADOR DE TENSION 5V	VOLTAGE REGULATOR 5V	
IS60,70,80,90	676593-000.6/00	2FACH-TREIBER L298N EXCITADOR DOBLE L298N	2FOLD DRIVER L298N	
LS20	698108-000.6/00	SCHALLGEBER GENERADOR ACUSTICO	BUZZER	
O.ILLUSTR.	01252S-000.6/00	ZYLINDERSCHRAUBE TORNILLO CILINDRICO M3X4	PAN-HEADED SCREW M3X4	
O.ILLUSTR.	676981-000.6/00	SOCKEL 40 POLIG ZOCALO 40 TERMINALES	SOCKET 40 POLE	

5.2 Steuerelektronik ESW 2000i
Control electronics pcb ESW 2000i
Plaque d'électronique ESW 2000i
Placa electrònica de control ESW 2000i

Pos.-Nr./Bauteil Pos. no./Comp.	Bestell-Nr. Ref. no.	Benennung Deutsch Denominacibn Espanol	Term English	Farbe Color
0.ILLUSTR.	67.200-3040.1/00	KUEHLKOERPER DISIPADOR DE CALOR	HEAT SINK	
R100,133,205,303	663480-320.6/00	KOSCHIWI 2,2KOHM 5% 1/4W RESISTENCIA DE CARBON 2,2KOHM 5% 1/4W	RESISTOR 2,2KOHM 5% 1/4W	
R130,400,501	663672-320.6/00	KOSCHIWI 1KOHM 5% 1/4W RESISTENCIA DE CARBON 1KOHM 5% 1/4W	RESISTOR 1KOHM 5% 1/4W	
R131,132,150,411	663496-320.6/00	KOSCHIWI 10KOHM 5% 1/4W RESISTENCIA DE CARBON 10KOHM 5% 1/4W	RESISTOR 10KOHM 5% 1/4W	
R200,306	663674-320.6/00	KOSCHIWI 1,2KOHM 5% 1/4W RESISTENCIA DE CARBON 1,2KOHM 5% 1/4W	RESISTOR 1,2KOHM 5% 1/4W	
R201	663676-320.6/00	KOSCHIWI 1,5KOHM 5% 1/4W RESISTENCIA DE CARBON 1,5KOHM 5% 1/4W	CARBON RESISTOR 1,5KOHM 5% 1/4W	
R202,602,702	663686-320.6/00	KOSCHIWI 3,9KOHM 5% 1/4W RESISTENCIA DE CARBON 3,9KOHM 5% 1/4W	RESISTOR 3,9KOHM 5% 1/4W	
R204	663638-320.6/00	KOSCHIWI 39 OHM 5% 1/4W RESISTENCIA DE CARBON 39 OHM 5% 1/4W	RESISTOR 39 OHM 5% 1/4W	
R300,302	663658-320.6/00	KOSCHIWI 270 OHM 5% 1/4W RESISTENCIA DE CARBON 270 OHM 5% 1/4W	RESISTOR 270 OHM 5% 1/4W	
R301	663658-320.6/00	KOSCHIWI 270 OHM 5% 1/4W RESISTENCIA DE CARBON 270 OHM 5% 1/4W	RESISTOR 270 OHM 5% 1/4W	
R304,900	663694-320.6/00	KOSCHIWI 8,2KOHM 5% 1/4W RESISTENCIA DE CARBON 8,2KOHM 5% 1/4W	RESISTOR 8,2KOHM 5% 1/4W	
R305,307,503,504	663480-320.6/00	KOSCHIWI 2,2KOHM 5% 1/4W RESISTENCIA DE CARBON 2,2KOHM 5% 1/4W	RESISTOR 2,2KOHM 5% 1/4W	
R410	663448-320.6/00	KOSCHIWI 100 OHM 5% 1/4W RESISTENCIA DE CARBON 100 OHM 5% 1/4W	RESISTOR 100 OHM 5% 1/4W	
R450	663689-320.6/00	KOSCHIWI 5,1KOHM 5% 1/4W RESISTENCIA DE CARBON 5,1KOHM 5% 1/4W	RESISTOR 5,1KOHM 5% 1/4W	
R500,508	663496-320.6/00	KOSCHIWI 10KOHM 5% 1/4W RESISTENCIA DE CARBON 10KOHM 5% 1/4W	RESISTOR 10KOHM 5% 1/4W	
R505	665801-015.6/00	WIDERSTAND 0,22 OHM 1/4W RESISTENCIA 0,22 OHM 1/4W	RESISTOR 0,22 OHM 1/4W	
R506	663408-120.6/00	KOSCHIWI 2,2 OHM 5% 1/4W RESISTENCIA DE CARBON 2,2 OHM 5% 1/4W	RESISTOR 2,2 OHM 5% 1/4W	
R510	663823-000.6/00	POTENTIOMETER 1KOHM POTENCIOMETRO 1KOHM	POTENTIOMETER 1KOHM	
R600,700,800	663694-320.6/00	KOSCHIWI 8,2KOHM 5% 1/4W RESISTENCIA DE CARBON 8,2KOHM 5% 1/4W	RESISTOR 8,2KOHM 5% 1/4W	
R601,701,801,901	663704-320.6/00	KOSCHIWI 22KOHM 5% 1/4W RESISTENCIA DE CARBON 22KOHM 5% 1/4W	CARBON RESISTOR 22KOHM 5% 1/4W	
R704,904	663052-000.6/00	DRAHTWIDERSTAND 4,7 OHM 2W RESISTENCIA BOBINADA 4,7 OHM 2W	RESISTOR 4,7 OHM 2W	
R802,902	663686-320.6/00	KOSCHIWI 3,9KOHM 5% 1/4W RESISTENCIA DE CARBON 3,9KOHM 5% 1/4W	RESISTOR 3,9KOHM 5% 1/4W	

5.2 Steuerelektronik ESW 2000i
Control electronics pcb ESW 2000i
Plaque d'électronique ESW 2000i
Placa electrònica de control ESW 2000i

Pos.-Nr./Bauteil Pos. no./Comp.	Bestell-Nr. Ref. no.	Benennung Deutsch Denominación Español	Term English	Farbe Color
RN1,14	677166-000.6/00	R-NETZWERK 8X10KOHM JUEGO DE RESISTENCIAS 8X10KOHM	RESISTOR ARRAY 8X10KOHM	
ST1	562354-012.6/00	STIFTLEISTE 12 POLIG CONECTOR 12 TERMINALES	CONNECTOR STRIP 12 POLE	
ST10,14,43	562457-020.6/00	STIFTLEISTE 20 POLIG CONECTOR 20 TERMINALES	CONNECTOR STRIP 20 POLE	
ST15,40	562354-003.6/00	STIFTLEISTE 3 POLIG CONECTOR 3 TERMINALES	CONNECTOR STRIP 3 POLE	
ST2	561800-000.6/00	FLACHSTECKER CONECTOR PLANO	FLAT CONNECTOR	
ST41,60,70	562354-004.6/00	STIFTLEISTE 4 POLIG CONECTOR 4 TERMINALES	CONNECTOR STRIP 4 POLE	
ST45	562354-005.6/00	STIFTLEISTE 5 POLIG CONECTOR 5 TERMINALES	CONNECTOR STRIP 5 POLE	
TS20,41	675182-000.6/00	TRANSISTOR BC337 TRANSISTOR BC337	TRANSISTOR BC337	
TS30	675144-000.6/00	TRANSISTOR BC327 TRANSISTOR BC327	TRANSISTOR BC327	
TS31-33,51,61	675143-000.6/00	TRANSISTOR BC237A TRANSISTOR BC237A	TRANSISTOR BC237A	
TS45	675252-000.6/00	TRANSISTOR TIP112 TRANSISTOR TIP112	TRANSISTOR TIP112	
TS60,70,80,90	675210-000.6/00	TRANSISTOR TIP125 TRANSISTOR TIP125	TRANSISTOR TIP125	
TS71,81,91	675143-000.6/00	TRANSISTOR BC237A TRANSISTOR BC237A	TRANSISTOR BC237A	
XT10,40	698527-000.6/00	SCHWINGQUARZ 4,000MHZ OSCILADOR DE CUARZO 4,000MHZ	QUARTZ 4,000MHZ	

5.2 Steuerelektronik (ESW 2000i)
Control electronics pcb (ESW 2000i)
Plaque d'électronique (ESW 2000i)
Placa electrònica de control (ESW 2000i)

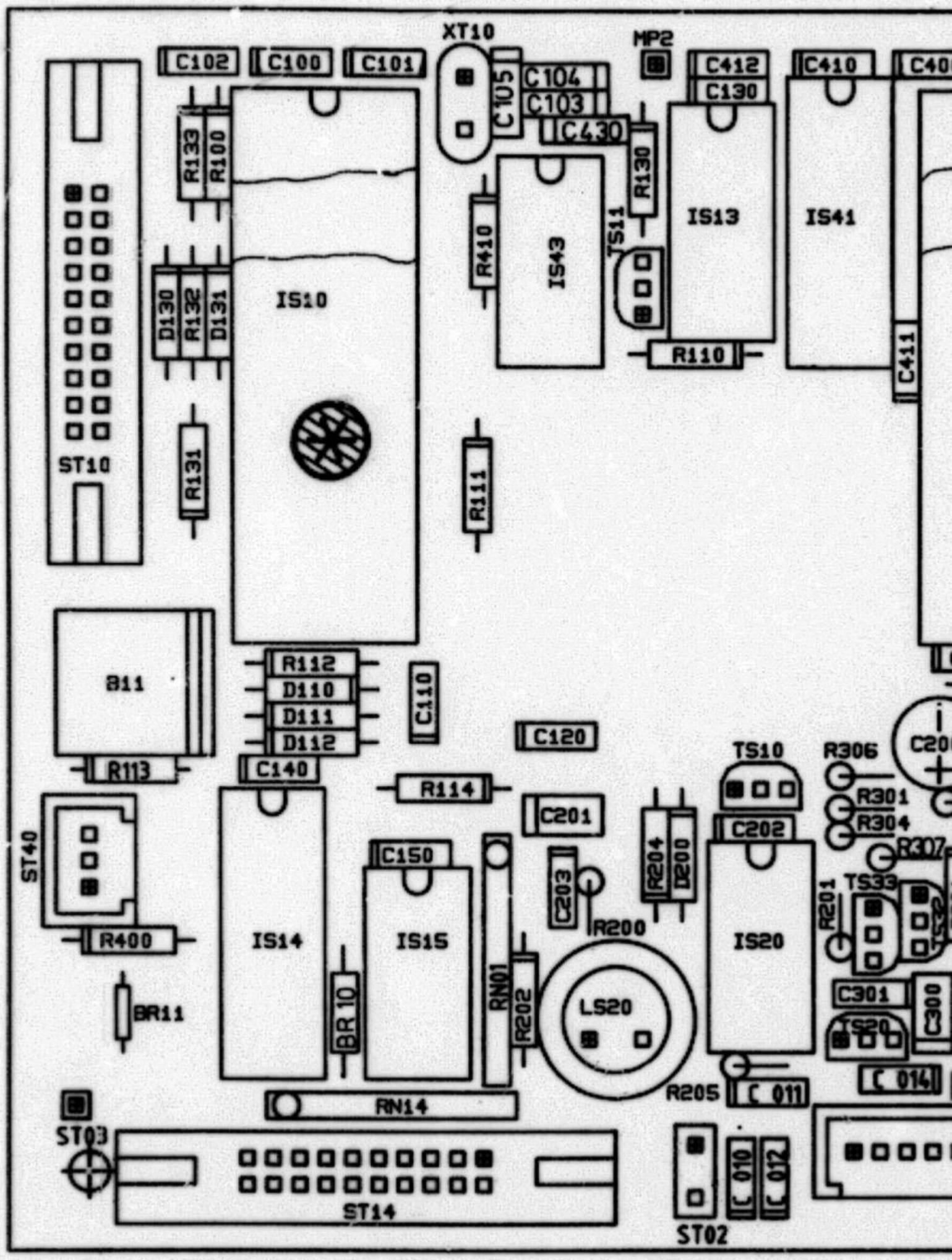

= Im Lieferumfang der Leiterplatte nicht enth
Not included in the scope of delivery of the
No se suministra con la placa electrónica.

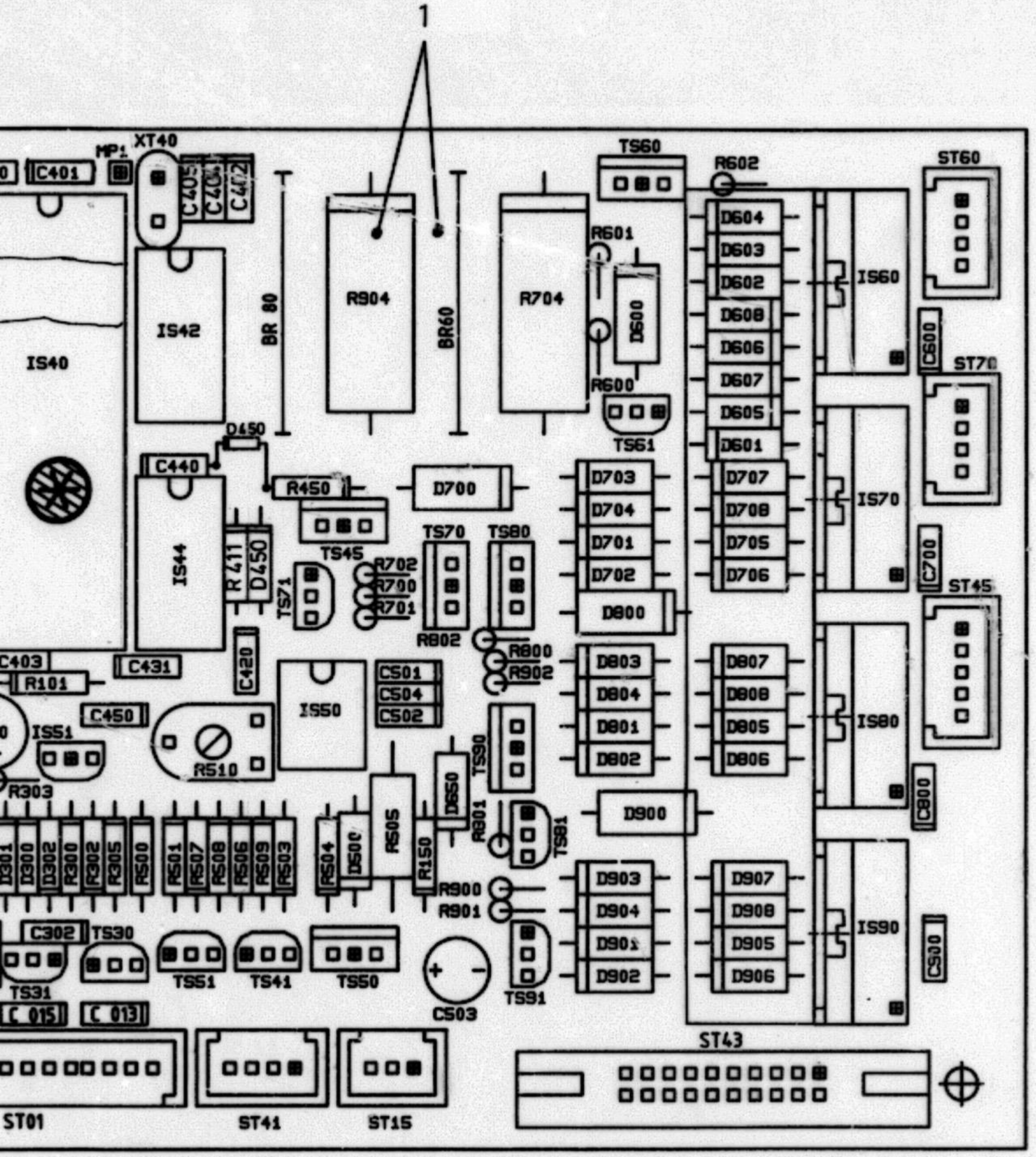

halten. Vor Einsendung als Austauschteil entfernen.
PCB. Remove before returning as an exchange assembly.
Hay que retirar la pieza antes de enviar la placa.

5.3 Steuerelektronik ESW 2500i
Control electronics pcb ESW 2500i
Plaque d'électronique ESW 2500i
Placa electrònica de control ESW 2500i

Pos.-Nr./Bauteil Pos. no./Comp.	Bestell-Nr. Ref. no.	Benennung Deutsch Denominacibn Español	Term English	Farbe Color
1	67.421-3002.2/00	STEUERELEKTRONIK KPL. PLACA ELECTRONICA DE CONTROL CPL.	CONTROL ELECTRONICS PCB ASSY.	
1	67.421-3002.5/00	REP.-STEUERELEKTRONIK PLACA ELECTRON. CONTROL REPARADA	EXCH. CONTROL PCB	
C100,400	661227-000.6/00	TA-ELKO 2,2UF 25V CONDENSADOR 2,2UF 25V	CONDENSER 2,2UF 25V	
C101,103,130,140	662441-000.6/00	KER-KONDENSATOR 100NF 50V CONDENSADOR CERAMICO 100NF 50V	CERAMIC CONDENSER 100NF 50V	
C102,402	662482-000.6/00	KONDENSATOR 10NF 40V CONDENSADOR 10NF 40V	CONDENSER 10NF 40V	
C104,105,404,405	662428-000.6/00	KONDENSATOR 33PF 63V CONDENSADOR 33PF 63V	CONDENSER 33PF 63V	
C13-15,600,700	662440-000.6/00	KONDENSATOR 0,33UF 50V CONDENSADOR 0,33UF 50V	CONDENSER 0,33UF 50V	
C150,202,203,401	662441-000.6/00	KER-KONDENSATOR 100NF 50V CONDENSADOR CERAMICO 100NF 50V	CERAMIC CONDENSER 100NF 50V	
C200	662951-000.6/00	TA-ELKO 100UF 10V CONDENSADOR ELECTROL. TANTALO 100UF 10V	CONDENSER 100UF 10V	
C201	662407-000.6/00	MKT-KONDENSATOR 220NF 63V CONDENSADOR "MCT" 220NF 63V	CONDENSER 220NF 63V	
C300	661237-000.6/00	KONDENSATOR 68UF 6,3V CONDENSADOR 68UF 6,3V	CONDENSER 68UF 6,3V	
C403,410,420,430	662441-000.6/00	KER-KONDENSATOR 100NF 50V CONDENSADOR CERAMICO 100NF 50V	CERAMIC CONDENSER 100NF 50V	
C411,412	662451-000.6/00	KONDENSATOR 0,01UF 50V CONDENSADOR 0,01UF 50V	CONDENSER 0,01UF 50V	
C501,502,301,431	662441-000.6/00	KER-KONDENSATOR 100NF 50V CONDENSADOR CERAMICO 100NF 50V	CERAMIC CONDENSER 100NF 50V	
C503	662767-000.6/00	AL-ELKO 47UF 40V CONDENSADOR ELECTROL. ALUM. 47UF 40V	CONDENSER 47UF 40V	
C800,900	662440-000.6/00	KONDENSATOR 0,33UF 50V CONDENSADOR 0,33UF 50V	CONDENSER 0,33UF 50V	
D130,200,301	672100-000.6/00	DIODE 1N4148 DIODO 1N4148	DIODE 1N4148	
D131,302,450	672100-000.6/00	DIODE 1N4148 DIODO 1N4148	DIODE 1N4148	
D300	672355-000.6/00	Z-DIODE BZY85B4,7 4,7V DIODO ZENER BZY85B4,7 4,7V	Z DIODE BZY85B4,7 4,7V	
D500	672173-000.6/00	DIODE SB160 DIODO SB160	DIODE SB160	
D600,700,800,900	672138-000.6/00	DIODE BY296 DIODO BY296	DIODE BY296	
D601-608,701-708	672171-000.6/00	DIODE UF4001 DIODO UF4001	DIODE UF4001	

5.3 Steuerelektronik ESW 2500i
Control electronics pcb ESW 2500i
Plaque d'électronique ESW 2500i
Placa electrònica de control ESW 2500i

Pos.-Nr./Bauteil Pos. no./Comp.	Bestell-Nr. Ref. no.	Benennung Deutsch Denominación Español	Term English	Farbe Color
D650	672147-000.6/00	Z-DIODE BZX85C43 43V DIODO ZENER BZX85C43 43V	Z DIODE BZX85C43 43V	
D801-808,901-908	672171-000.6/00	DIODE UF4001 DIODO UF4001	DIODE UF4001	
IS10	651240-090.8/01	4K-EPROM 2532 (1249-090/1) EPROM DE 4K 2532 (1249-090/1)	4K EPROM 2532 (1249-090/1)	
IS10	653240-090.6/01	MASKENRECHNER 1CHIP CPU PROGRAMADA 1CHIP	MASK-PROGRAMMED CPU 1CHIP	
IS10,40	676812-000.6/00	MIKROCOMPUTER 3780 MICROPROCESADOR 3780	MICROCOMPUTER 3780	
IS13	676204-000.6/00	3BIT-DEKODER 74LS138 DECODIFICADOR DE 3 BIT 74LS138	3BIT DECODER 74LS138	
IS14	676581-000.6/00	8FACH-BUS-TREIBER 74HC245 EXCITADOR BUS OCTUPLE 74HC245	8FOLD BUS DRIVER 74HC245	
IS15	676170-000.6/00	4FACH-NAND-GATTER 74LS03 PUERTA NAND CUADRUPLE 74LS03	4FOLD NAND GATE 74LS03	
IS20	676202-000.6/00	4FACH-NAND-GATTER 74LS00 PUERTA NAND CUADRUPLE 74LS00	4FOLD NAND GATE 74LS00	
IS40	651240-037.6/04	4K EPROM 2532 (1240-037/X) 4K EPROM 2532 (1240-037/X)	4K EPROM 2532 (1240-037/X)	
IS40	653240-037.6/04	EINCHIPRECHNER CPU PROGRAMADA 1CHIP	MASK PROGRAMED CPU	
IS41	676367-000.6/00	8FACH-LATCH 74HCT373 "LATCH" OCTUPLE 74HCT373	8FOLD LATCH 74HCT373	
IS42	676201-000.6/00	6FACH-INVERTER 74LS04 INVERSORA SEXTUPLE 74LS04	6FOLD INVERTER 74LS04	
IS43	676203-000.6/00	4FACH-NOR-GATTER 74LS02 PUERTA NOR CUADRUPLE 74LS02	4FOLD NOR GATE 74LS02	
IS44	676261-000.6/00	4FACH-EX-OR-GATTER 74LS86 PUERTA EX-OR CUADRUPLE 74LS86	4FOLD EX-OR GATE 74LS86	
IS50	676508-000.6/00	KOMPARATOR 311 COMPARADOR 311	COMPARATOR 311	
IS51	676737-000.6/00	SPANNUNGSREGLER 5V REGULADOR DE TENSION 5V	VOLTAGE REGULATOR 5V	
IS60,70,80,90	676593-000.6/00	2FACH-TREIBER L298N EXCITADOR DOBLE L298N	2FOLD DRIVER L298N	
LS20	678108-000.6/00	SCHALLGEBER GENERADOR ACUSTICO	BUZZER	
O.ILLUSTR.	012526-000.6/00	ZYLINDERSCHRAUBE TORNILLO CILINDRICO M3X4	PAN-HEADED SCREW M3X4	
O.ILLUSTR.	676981-000.6/00	SOCKEL 40 POLIG ZOCALO 40 TERMINALES	SOCKET 40 POLE	
O.ILLUSTR.	67.200-3040.1/00	KUEHLKOERPER DISIPADOR DE CALOR	HEAT SINK	

5.3 Steuerelektronik ESW 2500i
Control electronics pcb ESW 2500i
Plaque d'électronique ESW 2500i
Placa electrònica de control ESW 2500i

Pos.-Nr./Bauteil Pos. no./Comp.	Bestell-Nr. Ref. no.	Benennung Deutsch Denominación Español	Term English	Farbe Color
R100,133,205	663480-320.6/00	KOSCHIWI 2,2KOHM 5% 1/4W RESISTENCIA DE CARBON 2,2KOHM 5% 1/4W	RESISTOR 2,2KOHM 5% 1/4W	
R130,400,501	663672-320.6/00	KOSCHIWI 1KOHM 5% 1/4W RESISTENCIA DE CARBON 1KOHM 5% 1/4W	RESISTOR 1KOHM 5% 1/4W	
R131,132,150,411	663496-320.6/00	KOSCHIWI 10KOHM 5% 1/4W RESISTENCIA DE CARBON 10KOHM 5% 1/4W	RESISTOR 10KOHM 5% 1/4W	
R200,306	663674-320.6/00	KOSCHIWI 1,2KOHM 5% 1/4W RESISTENCIA DE CARBON 1,2KOHM 5% 1/4W	RESISTOR 1,2KOHM 5% 1/4W	
R201	663476-320.6/00	KOSCHIWI 1,5KOHM 5% 1/4W RESISTENCIA DE CARBON 1,5KOHM 5% 1/4W	CARBON RESISTOR 1,5KOHM 5% 1/4W	
R202,602,702	663686-320.6/00	KOSCHIWI 3,9KOHM 5% 1/4W RESISTENCIA DE CARBON 3,9KOHM 5% 1/4W	RESISTOR 3,9KOHM 5% 1/4W	
R204	663638-320.6/00	KOSCHIWI 39 OHM 5% 1/4W RESISTENCIA DE CARBON 39 OHM 5% 1/4W	RESISTOR 39 OHM 5% 1/4W	
R300,302	663658-320.6/00	KOSCHIWI 270 OHM 5% 1/4W RESISTENCIA DE CARBON 270 OHM 5% 1/4W	RESISTOR 270 OHM 5% 1/4W	
R301	663658-320.6/00	KOSCHIWI 270 OHM 5% 1/4W RESISTENCIA DE CARBON 270 OHM 5% 1/4W	RESISTOR 270 OHM 5% 1/4W	
R303	663666-320.6/00	KOSCHIWI 560 OHM 1/4W RESISTENCIA DE CARBON 560 OHM 1/4W	CARBON RESISTOR 560 OHM 1/4W	
R304,900	663694-320.6/00	KOSCHIWI 8,2KOHM 5% 1/4W RESISTENCIA DE CARBON 8,2KOHM 5% 1/4W	RESISTOR 8,2KOHM 5% 1/4W	
R305,307,503,504	663480-320.6/00	KOSCHIWI 2,2KOHM 5% 1/4W RESISTENCIA DE CARBON 2,2KOHM 5% 1/4W	RESISTOR 2,2KOHM 5% 1/4W	
R308	663678-320.6/00	KOSCHIWI 1,8KOHM 1/4W RESISTENCIA DE CARBON 1,8KOHM 1/4W	CARBON RESISTOR 1,8KOHM 1/4W	
R410	663448-320.6/00	KOSCHIWI 100 OHM 5% 1/4W RESISTENCIA DE CARBON 100 OHM 5% 1/4W	RESISTOR 100 OHM 5% 1/4W	
R450	663689-320.6/00	KOSCHIWI 5,1KOHM 5% 1/4W RESISTENCIA DE CARBON 5,1KOHM 5% 1/4W	RESISTOR 5,1KOHM 5% 1/4W	
R500	663496-320.6/00	KOSCHIWI 10KOHM 5% 1/4W RESISTENCIA DE CARBON 10KOHM 5% 1/4W	RESISTOR 10KOHM 5% 1/4W	
R505	665801-015.6/00	WIDERSTAND 0,22 OHM 1/4W RESISTENCIA 0,22 OHM 1/4W	RESISTOR 0,22 OHM 1/4W	
R506	663408-120.6/00	KOSCHIWI 2,2 OHM 5% 1/4W RESISTENCIA DE CARBON 2,2 OHM 5% 1/4W	RESISTOR 2,2 OHM 5% 1/4W	
R507	663480-320.6/00	KOSCHIWI 2,2KOHM 5% 1/4W RESISTENCIA DE CARBON 2,2KOHM 5% 1/4W	CARBON·RESISTOR 2,2KOHM 5% 1/4W	
R508	663267-000.6/00	MESCHIWI 10KOHM 1/4W RESISTENCIA DE METAL 10KOHM 1/4W	METALLIC RESISTOR 10KOHM 1/4W	
R509	663370-320.6/00	KOSCHIWI 820 OHM 1/4W RESISTENCIA DE CARBON 820 OHM 1/4W	CARBON RESISTOR 820 OHM 1/4W	
R510	663823-000.6/00	POTENTIOMETER 1KOHM POTENCIOMETRO 1KOHM	POTENTIOMETER 1KOHM	

5.3 Steuerelektronik ESW 2500i
Control electronics pcb ESW 2500i
Plaque d'électronique ESW 2500i
Placa electrònica de control ESW 2500i

Pos.-Nr./Bauteil Pos. no./Comp.	Bestell-Nr. Ref. no.	Benennung Deutsch Denominacibn Español	Term English	Farbe Color
R600,700,800	663694-320.6/00	KOSCHIWI 8,2KOHM 5% 1/4W RESISTENCIA DE CARBON 8,2KOHM 5% 1/4W	RESISTOR 8,2KOHM 5% 1/4W	
R601,701,801,901	663704-320.6/00	KOSCHIWI 22KOHM 5% 1/4W RESISTENCIA DE CARBON 22KOHM 5% 1/4W	CARBON RESISTOR 22KOHM 5% 1/4W	
R704,904	663052-000.6/00	DRAHTWIDERSTAND 4,7 OHM 2W RESISTENCIA BOBINADA 4,7 OHM 2W	RESISTOR 4,7 OHM 2W	
R802,902	663686-320.6/00	KOSCHIWI 3,9KOHM 5% 1/4W RESISTENCIA DE CARBON 3,9KOHM 5% 1/4W	RESISTOR 3,9KOHM 5% 1/4W	
RN1,14	677166-000.6/00	R-NETZWERK 8X10KOHM JUEGO DE RESISTENCIAS 8X10KOHM	RESISTOR ARRAY 8X10KOHM	
ST1	562354-012.6/00	STIFTLEISTE 12 POLIG CONECTOR 12 TERMINALES	CONNECTOR STRIP 12 POLE	
ST10,14,43	562457-020.6/00	STIFTLEISTE 20 POLIG CONECTOR 20 TERMINALES	CONNECTOR STRIP 20 POLE	
ST15,40	562354-003.6/00	STIFTLEISTE 3 POLIG CONECTOR 3 TERMINALES	CONNECTOR STRIP 3 POLE	
ST2	561800-000.6/00	FLACHSTECKER CONECTOR PLANO	FLAT CONNECTOR	
ST41,60,70	562354-004.6/00	STIFTLEISTE 4 POLIG CONECTOR 4 TERMINALES	CONNECTOR STRIP 4 POLE	
ST45	562354-005.6/00	STIFTLEISTE 5 POLIG CONECTOR 5 TERMINALES	CONNECTOR STRIP 5 POLE	
TS20,41	675192-000.6/00	TRANSISTOR BC337 TRANSISTOR BC337	TRANSISTOR BC337	
TS30	675144-000.6/00	TRANSISTOR BC327 TRANSISTOR BC327	TRANSISTOR BC327	
TS31-33,51,61	675143-000.6/00	TRANSISTOR BC237A TRANSISTOR BC237A	TRANSISTOR BC237A	
TS45	675252-000.6/00	TRANSISTOR TIP112 TRANSISTOR TIP112	TRANSISTOR TIP112	
TS60,70,80,90	675210-000.6/00	TRANSISTOR TIP125 TRANSISTOR TIP125	TRANSISTOR TIP125	
TS71,81,91	675143-000.6/00	TRANSISTOR BC237A TRANSISTOR BC237A	TRANSISTOR BC237A	
XT10,40	698527-000.6/00	SCHWINGQUARZ 4,000MHZ OSCILADOR DE CUARZO 4,000MHZ	QUARTZ 4,000MHZ	

5.3 Steuerelektronik ESW 2500i
Control electronics pcb ESW 2500i
Plaque d'électronique ESW 2500i
Placa electrònica de control ESW 2500i

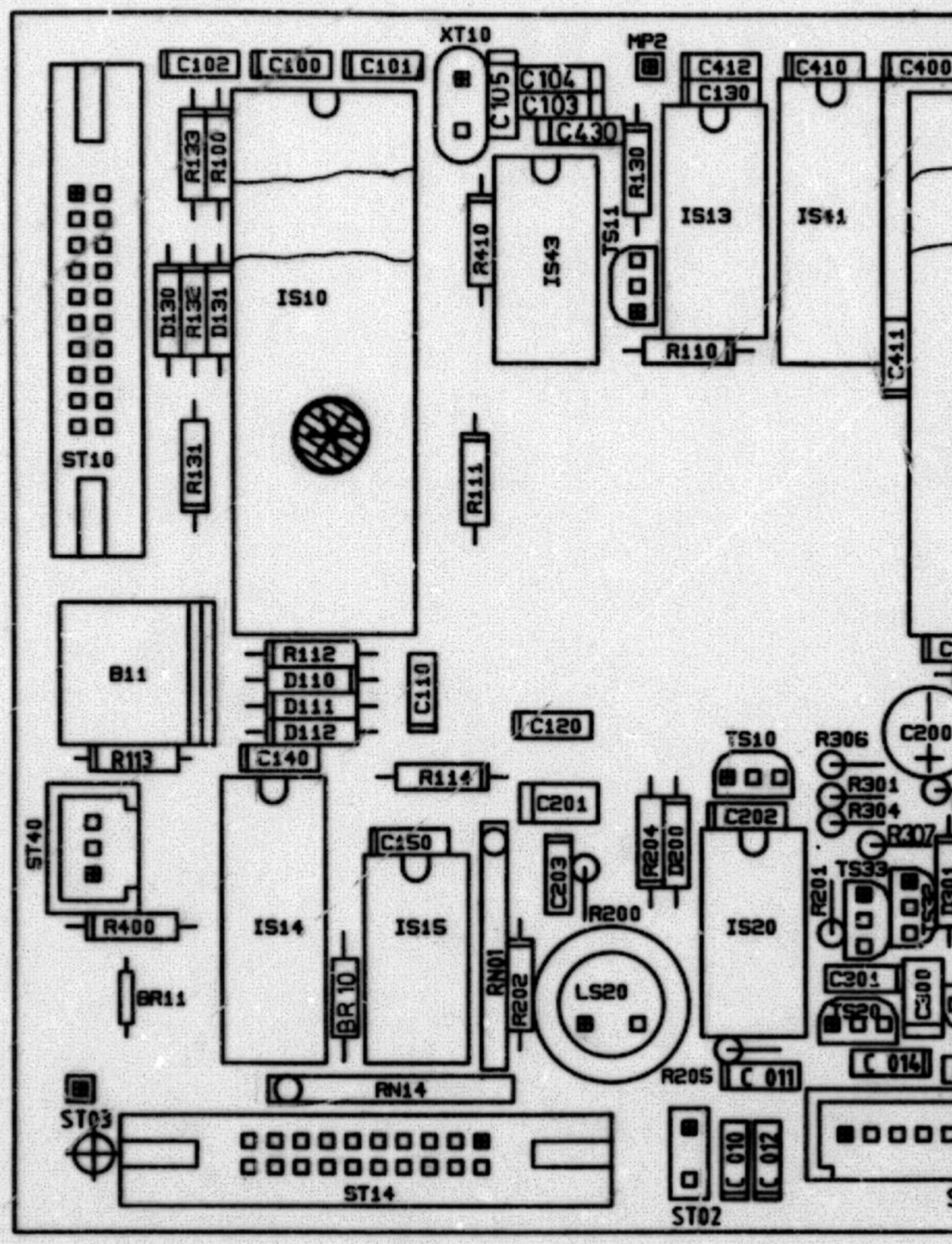

= Im Lieferumfang der Leiterplatte nicht enth
Not included in the scope of delivery of the
No se suministra con la placa electrónica.

Seite/Page/Página :	05-003
Datum/Date/Fecha :	09.88/01
Ident.-Nr./Ident. no.:	3791.00.67

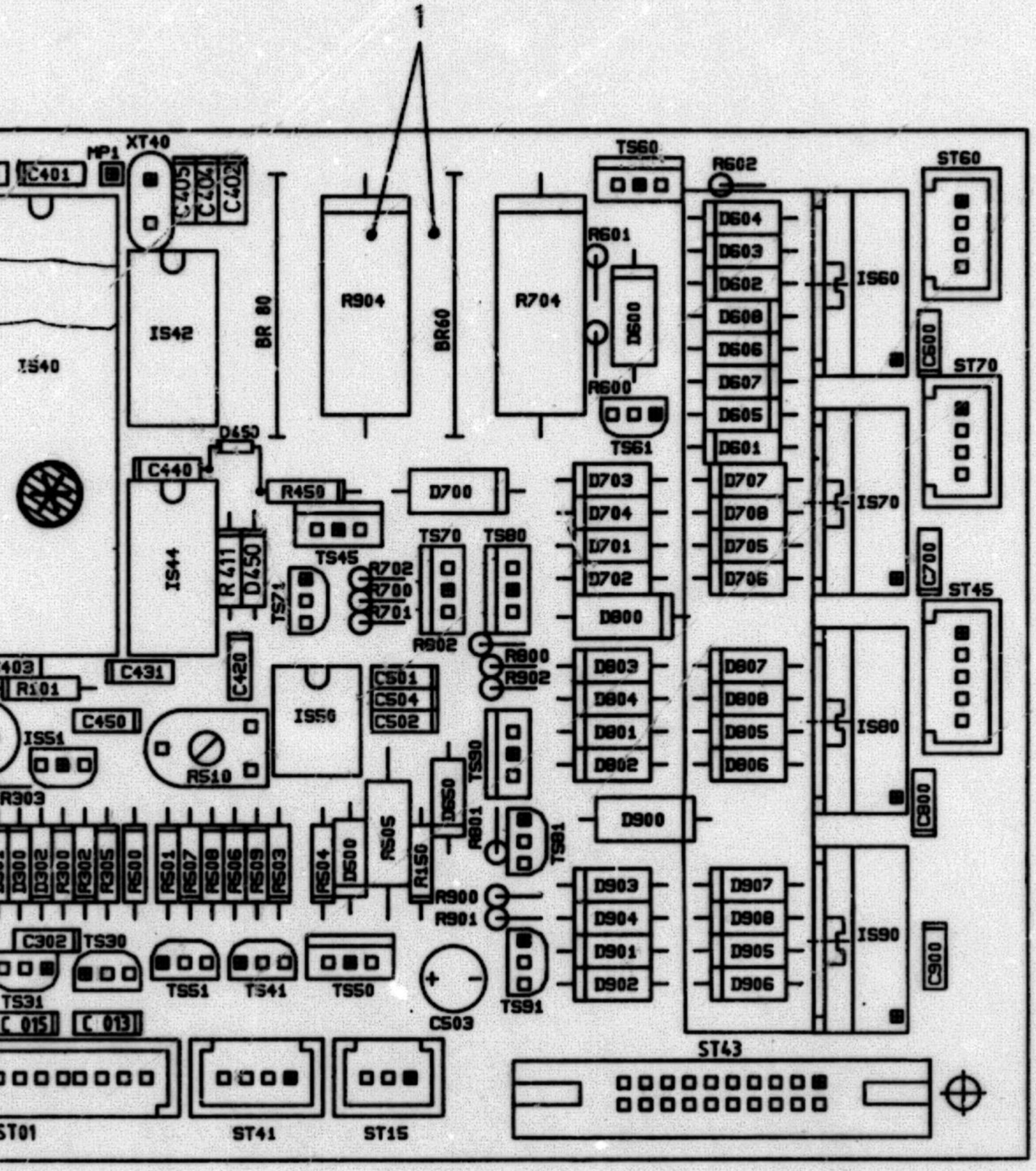

halten. Vor Einsendung als Austauschteil entfernen.
PCB. Remove before returning as an exchange assembly.
Hay que retirar la pieza antes de enviar la placa.

8. Bedienfeld/Control panel
Tableau de commande/Panel de mando

8.1 Leiterplatte Bedienfeld
Pcb control panel
Circuit imprimé tableau de commande
Placa electrònica panel de mando

Pos.-Nr./Bauteil Pos. no./Comp.	Bestell-Nr. Ref. no.	Benennung Deutsch Denominación Español	Term English	Farbe Color
1	67.400-4100.2/00	LEITERPLATTE BEDIENFELD KPL. PLACA ELECTRONICA PANEL DE MANDO CPL. ESW 2000/2000C	PCB CONTROL PANEL ASSY.	F313
1	67.401-4100.2/00	LEITERPLATTE BEDIENFELD KPL. PLACA ELECTRONICA PANEL DE MANDO CPL. ESW 2000i	PCB CONTROL PANEL ASSY.	F313
1	67.421-4100.2/00	LEITERPLATTE BEDIENFELD KPL. PLACA ELECTRONICA PANEL DE MANDO CPL. ESW 2500i	PCB CONTROL PANEL ASSY.	F313
1	67.421-4100.2/01	LEITERPLATTE BEDIENFELD KPL. PLACA ELECTRONICA PANEL DE MANDO CPL. ESW 2500i	PCB CONTROL PANEL ASSY.	F314
2	66.300-4103.1/00	LED-HALTER SOPORTE DE LED	LED HOLDER	
3	66.300-4126.1/00	KNOPF BOTON	KNOB	F313
3	66.300-4126.1/02	KNOPF BOTON	KNOB	F314
C1	662441-000.6/00	KER-KONDENSATOR 100NF 50V CONDENSADOR CERAMICO 100NF 50V	CERAMIC CONDENSER 100NF 50V	
C2	662451-000.6/00	KONDENSATOR 0,01UF 50V CONDENSADOR 0,01UF 50V	CONDENSER 0,01UF 50V	
D1-3,20-24	672510-000.6/00	DIODE AA143 DIODO AA143	DIODE AA143	
D12-17	672100-000.6/00	DIODE 1N4148 DIODO 1N4148	DIODE 1N4148	
IS1	676310-000.6/00	D-FLIP-FLOP 7474 FLIP-FLOP D 7474	D FLIP-FLOP 7474	
IS2	676255-000.6/00	4FACH-OR-GATTER 74LS32 PUERTA OR CUADRUPLE 74LS32	4FOLD OR GATE 74LS32	
LED1,3	671221-000.6/00	LED GRUEN LED VERDE	LED GREEN	
LED2	671222-000.6/00	LED GELB LED AMARILLO	LED YELLOW	
R1,2	663680-328.6/00	KOSCHWI 330 OHM 5% 1/4W RESISTENCIA DE CARBON 330 OHM 5% 1/4W	CARBON RESISTOR 330 OHM 5% 1/4W	
R3	663448-328.6/00	KOSCHWI 100 OHM 5% 1/4W RESISTENCIA DE CARBON 100 OHM 5% 1/4W	RESISTOR 100 OHM 5% 1/4W	
S1	66.300-4110.2/00	SCHIEBESCHALTER SELECTOR DESLIZANTE	SLIDING SWITCH	F313
S1	66.300-4110.2/03	SCHIEBESCHALTER	SLIDING SWITCH	F314
S2,3	66.300-4111.2/00	SCHIEBESCHALTER SELECTOR DESLIZANTE	SLIDING SWITCH	F313

8. Bedienfeld/Control panel
Tableau de commande/Panel de mando

8.1 Leiterplatte Bedienfeld
Pcb control panel
Circuit imprimé tableau de commande
Placa electrònica panel de mando

Pos.-Nr./Bauteil Pos. no./Comp.	Bestell-Nr. Ref. no.	Benennung Deutsch Denominación Español	Term English	Farbe Color
S2,3	66.300-4111.2/03	SCHIEBESCHALTER	SLIDING SWITCH	F314
S4	563157-010.6/00	KODIERSCHALTER 10 POLIG CODIFICADOR 10 TERMINALES	CODING SWITCH 10 POLE	
T1-6	66.300-4102.1/00	SCHALTER INTERRUPTOR	SWITCH	
X1	67.400-4110.2/00	FLACHBANDLEITER MANGUERA PLANA	FLAT CABLE	

8. Bedienfeld/Control panel
Tableau de commande/Panel de mando

8.1 Leiterplatte Bedienfeld
Pcb control panel
Circuit imprimé tableau de commande
Placa electrònica panel de mando

Sonderausführung ESW 2000i/2500i
Constructions special ESW 2000i/2500i

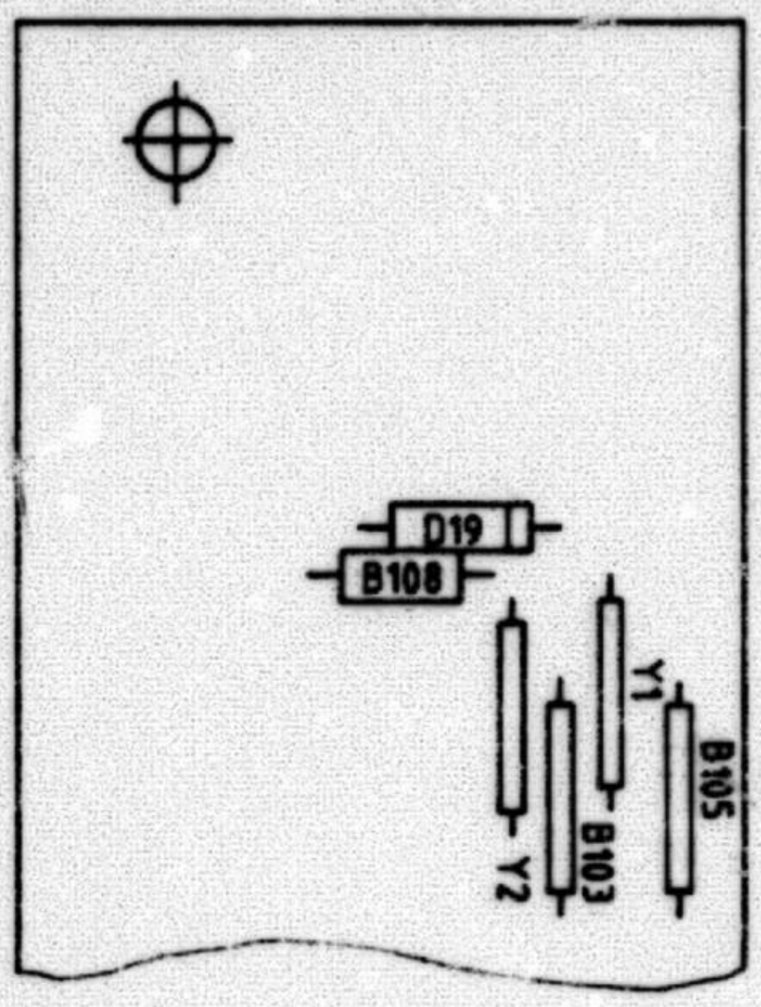

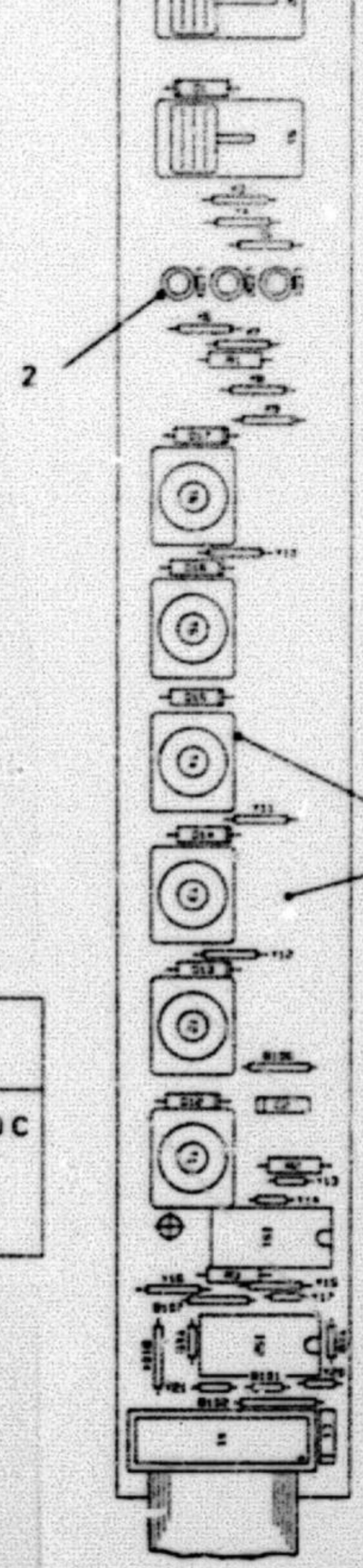

Pos. Nr. Pos. no.	Bestell-Nr. Reference no.	Nicht bestückte Bauelemente Components not incorporated	ESW
1	67.400-4100.2/00	B104...B108	2000/2000 C
1	67.401-4100.2/00	B104...B107, D4...D11, D18, S41...S50, B108 f. S41	2000i
1	67.421-4100.2/xx	B104...B108, D4...D11, D18, D19, S41...S50, B108 F. S41	2500i

Ersatzteilkatalog
Spare parts catalog
Catalogue de pièces de rechange
Catálogo de Repuestos

AEG
OLYMPIA

ESW 2000/2000C/2000i/2500i

Service Department

10. STANDARD Schnittstellen/STANDARD interfaces
STANDARD jonctions/ESTANDAR interfaces

10.1 Schnittstelle CENTRONICS
Interface CENTRONICS
Jonction CENTRONICS
Interface CENTRONICS

Pos.-Nr./Bauteil Pos. no./Comp.	Bestell-Nr. Ref. no.	Benennung Deutsch Denominación Español	Term English	Farbe Color
	67.400-3042.2/00	SCHNITTSTELLE CENTRONICS INTERFACE CENTRONICS	INTERFACE CENTRONICS	
1	311425-000.6/00	KREUZSCHLITZSCHRAUBE M2,5X10 TORNILLO DE ESTRELLA M2,5X10	RECESSED HEAD SCREW M2,5X10	
2	034259-000.[illegible]	SCHEIBE ARANDELA	WASHER	
3	331100-000.6/00	SECHSKANTMUTTER M2,5X2 TUERCA EXAGONAL M2,5X2	HEXAGONAL NUT M2,5X2	
4	577918-000.8/00	MASSEBAND CABLE DE MASA	GROUND CABLE	
Bu2	67.550-3154.2/00	FLACHBANDLEITER 20 POLIG CONECTOR 20 TERMINALES	FLAT CABLE 20 POLE	
C1,2,5,6	662441-000.6/00	KER-KONDENSATOR 100NF 50V CONDENSADOR CERAMICO 100NF 50V	CERAMIC CONDENSER 100NF 50V	
C3	662240-000.6/00	KONDENSATOR 22NF 250V CONDENSADOR 22NF 250V	CONDENSER 22NF 250V	
C4	662452-000.6/00	KER-KONDENSATOR 1NF 63V CONDENSADOR CERAMICO 1NF 63V	CERAMIC CONDENSER 1NF 63V	
D1	672100-000.6/00	DIODE 1N4148 DIODO 1N4148	DIODE 1N4148	
IS1,2	676123-000.6/00	6FACH-INVERTER 7404 INVERSORA SEXTUPLE 7404	6FOLD INVERTER 7404	
IS3	676340-000.6/00	8FACH-LATCH 74LS373 "LATCH" OCTUPLE 74LS373	8FOLD LATCH 74LS373	
IS4,5	676120-000.6/00	4FACH-NAND-GATTER 7400 PUERTA NAND CUADRUPLE 7400	4FOLD NAND GATE 7400	
R1	663656-320.6/00	KOSCHIWI 220 OHM 5% 1/4W RESISTENCIA DE CARBON 220 OHM 5% 1/4W	CARBON RESISTOR 220 OHM 5% 1/4W	
R4	663664-320.6/00	KOSCHIWI 470 OHM 5% 1/4W RESISTENCIA DE CARBON 470 OHM 5% 1/4W	CARBON RESISTOR 470 OHM 5% 1/4W	
RN1	677170-000.6/00	R-NETZWERK 8X1KOHM JUEGO DE RESISTENCIAS 8X1KOHM	RESISTOR ARRAY 8X1KOHM	
X1	562510-000.6/00	AMP-BUCHSE 36 POLIG CONECTOR AMP 36 TERMINALES	SOCKET 36 POLE	

10. STANDARD Schnittstellen/STANDARD interfaces
STANDARD jonctions/ESTANDAR interfaces

10.1 Schnittstelle CENTRONICS
Interface CENTRONICS
Jonction CENTRONICS
Interface CENTRONICS

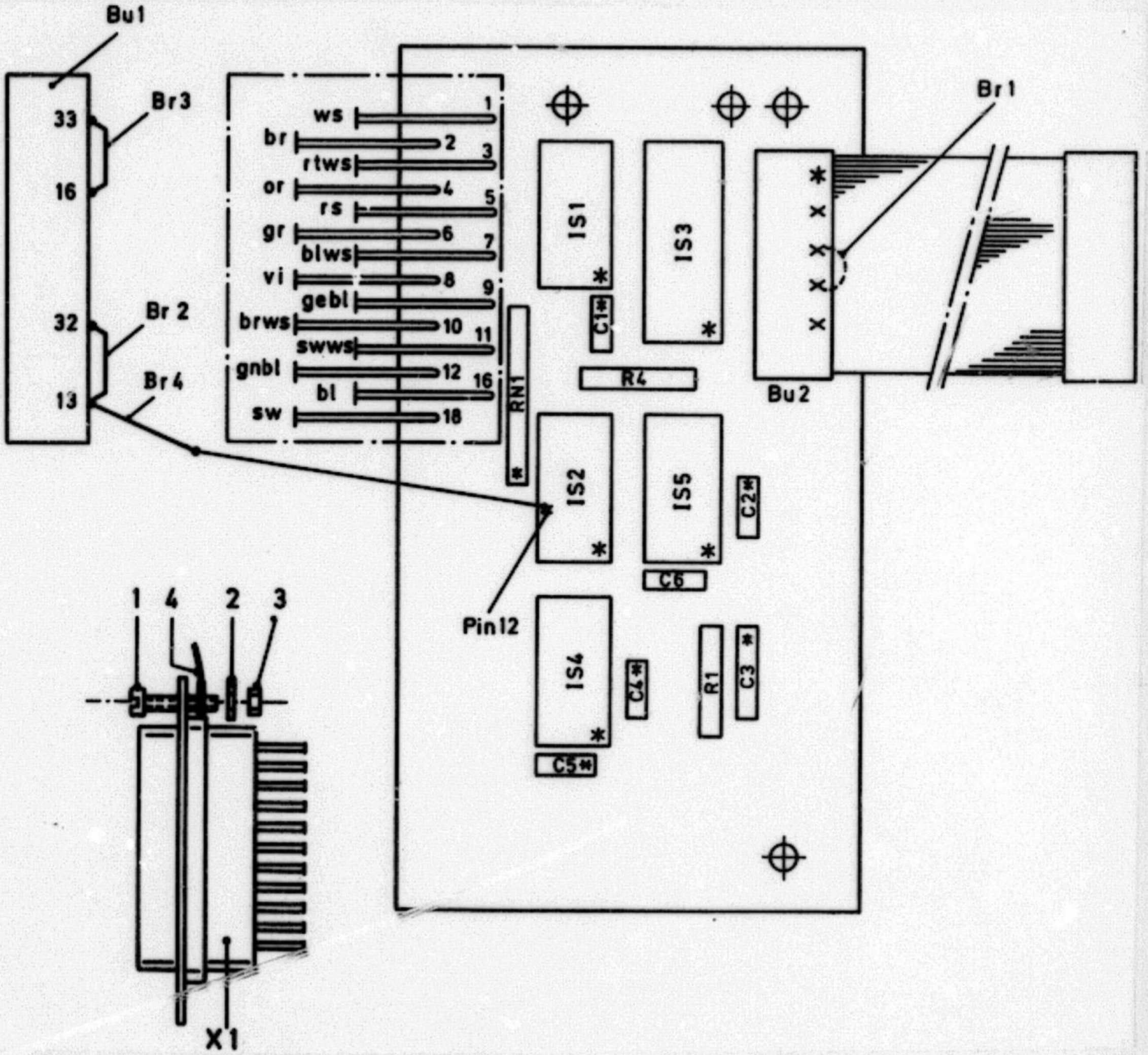

10.2 Schnittstelle RS232C (V24)
Interface RS232C (V24)
Jonction RS232C (V24)
Interface RS232C (V24)

Pos.-Nr./Bauteil Pos. no./Comp.	Bestell-Nr. Ref. no.	Benennung Deutsch Denominación Español	Term English	Farbe Color
	67.600-3158.2/00	SCHNITTSTELLE RS232C (V24) INTERFACE RS232C (V24)	INTERFACE RS232C (V24)	
	67.600-3158.5/00	REP.-LEITERPL. RS232C (V24) PLACA ELECTR. REPARADA RS232C (V24)	EXCH. PCB RS232C (V24)	
1	314310-002.6/00	SECHSKANTSCHRAUBE TORNILLO EXAGONAL M2,5X10	HEXAGONAL BOLT	
2	034253-000.6/00	SCHEIBE ARANDELA	WASHER	
3	331100-000.6/00	SECHSKANTMUTTER M2,5X2 TUERCA EXAGONAL M2,5X2	HEXAGONAL NUT M2,5X2	
4	67.600-3019.2/00	MASSEBAND CABLE DE MASA	GROUND CABLE	
BU2	67.550-3154.2/00	FLACHBANDLEITER 20 POLIG MANGUERA PLANA 20 TERMINALES	FLAT CABLE 20 POLE	
C1...4	661202-000.6/00	TA-ELKO 2,2UF 25V CONDENSADOR ELECTROL. TANTALO 2,2UF 25V	CONDENSER 2,2UF 25V	
C17	662441-000.6/00	KER-KONDENSATOR 100NF 50V CONDENSADOR CERAMICO 100NF 50V	CERAMIC CONDENSER 100NF 50V	
C5,7,8	661205-000.6/00	KONDENSATOR 150PF 500V CONDENSADOR 150PF 500V	CONDENSER 150PF 500V	
C6	662440-000.6/00	KONDENSATOR 0,33UF 50V CONDENSADOR 0,33UF 50V	CONDENSER 0,33UF 50V	
C9,10,14,15	662468-000.6/00	KONDENSATOR 330PF 63V CONDENSADOR 330PF 63V	CONDENSER 330PF 63V	
D1...9	662100-000.6/00	MKT-KONDENSATOR CONDENSADOR "MCT"	MCT CONDENSER	
IS1	676824-000.6/00	IS UART-COM 8017 IS "UART-COM" 8017	IC UART-COM 8017	
IS2	676613-000.6/00	BAUDRATE-GENERATOR 8126 GENERADOR VEL. TRANSFERENCIA 8126	BAUD RATE GENERATOR 8126	
IS3	676542-000.6/00	4FACH-LEITUNGSTREIBER 1488 EXCITADOR DE POTENCIA CUADRUPLE 1488	4FOLD DRIVER 1488	
IS4	676539-000.6/00	4FACH-EMPFAENGER 75189 RECEPTOR CUADRUPLE 75189	4FOLD RECEIVER 75189	
IS5	676547-000.6/00	8FACH-BUFFER-INVERT. 74LS240 REGISTRO INVERSOR OCTUPLE 74LS240	8FOLD BUFFER INVERTER 74LS240	
IS6	676263-000.6/00	3FACH-NOR-GATTER 74LS27 PUERTA NOR TRIPLE 74LS27	3FOLD NOR GATE 74LS27	
IS7	676201-000.6/00	6FACH-INVERTER 74LS04 INVERSORA SEXTUPLE 74LS04	6FOLD INVERTER 74LS04	
IS8	676262-000.6/00	MULTIPLEXER 74LS158 MULTIPLEXADOR 74LS158	MULTIPLEXER 74LS158	
IS9	671712-000.6/00	OPTO-KOPPLER ACOPLADOR OPTICO CNY48	LIGHT BARRIER	

10.2 Schnittstelle RS232C (V24)
Interface RS232C (V24)
Jonction RS232C (V24)
Interface RS232C (V24)

Pos.-Nr./Bauteil Pos. no./Comp.	Bestell-Nr. Ref. no.	Benennung Deutsch Denominación Español	Term. English	Farbe Color
R1,13	663496-320.6/00	KOSCHIWI 10KOHM 5% 1/4W RESISTENCIA DE CARBON 10KOHM 5% 1/4W	RESISTOR 10KOHM 5% 1/4W	
R10,14	663484-120.6/00	KOSCHIWI 3,3KOHM 5% 1/8W RESISTENCIA DE CARBON 3,3KOHM 5% 1/8W	CARBON RESISTOR 3,3KOHM 5% 1/8W	
R2	663664-320.6/00	KOSCHIWI 470 OHM 5% 1/4W RESISTENCIA DE CARBON 470 OHM 5% 1/4W	CARBON RESISTOR 470 OHM 5% 1/4W	
R3,4,12	663480-320.6/00	KOSCHIWI 2,2KOHM 5% 1/4W RESISTENCIA DE CARBON 2,2KOHM 5% 1/4W	RESISTOR 2,2KOHM 5% 1/4W	
R5	663638-320.6/00	KOSCHIWI 39 OHM 5% 1/4W RESISTENCIA DE CARBON 39 OHM 5% 1/4W	RESISTOR 39 OHM 5% 1/4W	
R6	663476-320.6/00	KOSCHIWI 1,5KOHM 5% 1/4W RESISTENCIA DE CARBON 1,5KOHM 5% 1/4W	CARBON RESISTOR 1,5KOHM 5% 1/4W	
R7	663544-120.6/00	KOSCHIWI 1MOHM 5% 1/8W RESISTENCIA DE CARBON 1MOHM 5% 1/8W	CARBON RESISTOR 1MOHM 5% 1/8W	
R8	663650-320.6/00	KOSCHIWI 120 OHM 5% 1/4W RESISTENCIA DE CARBON 120 OHM 5% 1/4W	CARBON RESISTOR 120 OHM 5% 1/4W	
R9,11	663672-320.6/00	KOSCHIWI 1KOHM 5% 1/4W RESISTENCIA DE CARBON 1KOHM 5% 1/4W	RESISTOR 1KOHM 5% 1/4W	
RN1,2	677166-000.6/00	R-NETZWERK 8X10KOHM JUEGO DE RESISTENCIAS 8X10KOHM	RESISTOR ARRAY 8X10KOHM	
S1	563157-010.6/00	KODIERSCHALTER 10 POLIG INTERRUPTOR CODIFICADOR 10 TERMINALES	CODING SWITCH 10 POLE	
TR1	67.600-3169.2/00	UEBERTRAGER TRANSMISOR	TRANSDUCER	
TS1,2	675144-000.6/00	TRANSISTOR BC327 TRANSISTOR BC327	TRANSISTOR BC327	
X1	562870-000.6/00	BUCHSENGEHAEUSE 25 POLIG CAJA DE CONECTOR 25 TERMINALES	SOCKET HOUSING 25 POLE	
XT1	693511-000.6/00	QUARZ 5,0688MHZ OSCILADOR DE CUARZO 5,0688MHZ	QUARTZ 5,0688MHZ	

10.2 Schnittstelle RS232C (V24)

Interface RS232C (V24)
Jonction RS232C (V24)
Interface RS232C (V24)

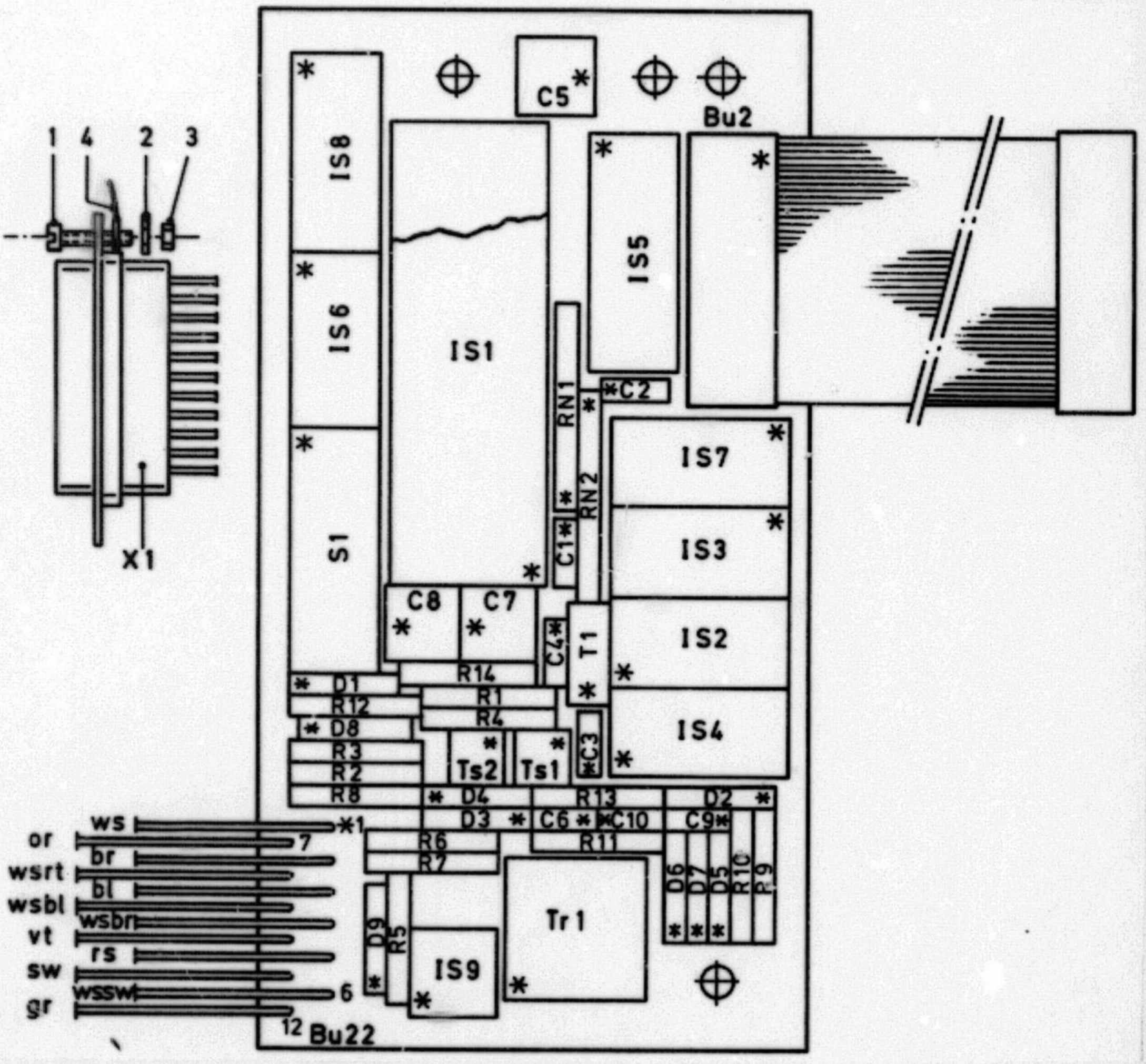

10.3 Schnittstelle RS232C FIFO
Interface RS232C FIFO
Jonction RS232C FIFO
Interface RS232C FIFO

Pos.-Nr./Bauteil Pos. no./Comp.	Bestell-Nr. Ref. no.	Benennung Deutsch Denominacibn Español	Term English	Farbe Color
	67.600-3228.2/00	SCHNITTSTELLE RS232C FIFO INTERFACE RS232C FIFO	INTERFACE RS232C FIFO	
	67.600-3228.5/00	REP.-LEITERPL. RS232C FIFO PLACA ELECTR. REPARADA RS232C FIFO	EXCH. PCB RS232C FIFO	
1	314310-002.6/00	SECHSKANTSCHRAUBE TORNILLO EXAGONAL M2,5X10	HEXAGONAL BOLT	
2	034259-000.6/00	SCHEIBE ARANDELA	WASHER	
3	331100-000.6/00	SECHSKANTMUTTER M2,5X2 TUERCA EXAGONAL M2,5X2	HEXAGONAL NUT M2,5X2	
4	67.600-3019.2/00	MASSEBAND CABLE DE MASA	GROUND CABLE	
BU2	67.550-3154.2/00	FLACHBANDLEITER 20 POLIG MANGUERA PLANA 20 TERMINALES	FLAT CABLE 20 POLE	
C1...4,11	662828-000.6/00	TA-ELKO 2,2UF 25V CONDENSADOR ELECTROL. TANTALO 2,2UF 25V	TA. EL. CONDENSER 2,2UF 25V	
C17	662441-000.6/00	KER-KONDENSATOR 100NF 50V CONDENSADOR CERAMICO 100NF 50V	CERAMIC CONDENSER 100NF 50V	
C5,7,8	661205-000.6/00	KONDENSATOR 150PF 500V CONDENSADOR 150PF 500V	CONDENSER 150PF 500V	
C6	662440-000.6/00	KONDENSATOR 0,33UF 50V CONDENSADOR 0,33UF 50V	CONDENSER 0,33UF 50V	
C9,10,14-16	662468-000.6/00	KONDENSATOR 330PF 63V CONDENSADOR 330PF 63V	CONDENSER 330PF 63V	
D1...9	662100-000.6/00	MKT-KONDENSATOR CONDENSADOR "MCT"	MCT CONDENSER	
IS1	676824-000.6/00	IS UART-COM 8017 IS "UART-COM" 8017	IC UART-COM 8017	
IS10,11	679712-000.6/00	64x4BIT-FIFO	64x4BIT FIFO	
IS2	676613-000.6/00	BAUDRATE-GENERATOR 8126 GENERADOR VEL. TRANSFERENCIA 8126	BAUD RATE GENERATOR 8126	
IS3	676542-000.6/00	4FACH-LEITUNGSTREIBER 1488 EXCITADOR DE POTENCIA CUADRUPLE 1488	4FOLD DRIVER 1488	
IS4	676539-000.6/00	4FACH-EMPFAENGER 75189 RECEPTOR CUADRUPLE 75189	4FOLD RECEIVER 75189	
IS5	676547-000.6/00	8FACH-BUFFER-INVERT. 74LS240 REGISTRO INVERSOR OCTUPLE 74LS240	8FOLD BUFFER INVERTER 74LS240	
IS6	676263-000.6/00	3FACH-NOR-GATTER 74LS27 PUERTA NOR TRIPLE 74LS27	3FOLD NOR GATE 74LS27	
IS7	676201-000.6/00	6FACH-INVERTER 74LS04 INVERSORA SEXTUPLE 74LS04	6FOLD INVERTER 74LS04	
IS8	676262-000.6/00	MULTIPLEXER 74LS158 MULTIPLEXADOR 74LS158	MULTIPLEXER 74LS158	

10.3 Schnittstelle RS232C FIFO
Interface RS232C FIFO
Jonction RS232C FIFO
Interface RS232C FIFO

Pos.-Nr./Bauteil Pos. no./Comp.	Bestell-Nr. Ref. no.	Benennung Deutsch Denominación Español	Term English	Farbe Color
IS9	671712-000.6/00	OPTO-KOPPLER ACOPLADOR OPTICO CNY48	LIGHT BARRIER	
R1,13	663496-320.6/00	KOSCHIWI 10KOHM 5% 1/4W RESISTENCIA DE CARBON 10KOHM 5% 1/4W	RESISTOR 10KOHM 5% 1/4W	
R10,14	663484-120.6/00	KOSCHIWI 3,3KOHM 5% 1/8W RESISTENCIA DE CARBON 3,3KOHM 5% 1/8W	CARBON RESISTOR 3,3KOHM 5% 1/8W	
R2	663664-320.6/00	KOSCHIWI 470 OHM 5% 1/4W RESISTENCIA DE CARBON 470 OHM 5% 1/4W	CARBON RESISTOR 470 OHM 5% 1/4W	
R3,4,12	663480-320.6/00	KOSCHIWI 2,2KOHM 5% 1/4W RESISTENCIA DE CARBON 2,2KOHM 5% 1/4W	RESISTOR 2,2KOHM 5% 1/4W	
R5	663638-320.6/00	KOSCHIWI 39 OHM 5% 1/4W RESISTENCIA DE CARBON 39 OHM 5% 1/4W	RESISTOR 39 OHM 5% 1/4W	
R7	663544-120.6/00	KOSCHIWI 1MOHM 5% 1/8W RESISTENCIA DE CARBON 1MOHM 5% 1/8W	CARBON RESISTOR 1MOHM 5% 1/8W	
R8	663650-320.6/00	KOSCHIWI 120 OHM 5% 1/4W RESISTENCIA DE CARBON 120 OHM 5% 1/4W	CARBON RESISTOR 120 OHM 5% 1/4W	
R9,11	663672-320.6/00	KOSCHIWI 1KOHM 5% 1/4W RESISTENCIA DE CARBON 1KOHM 5% 1/4W	RESISTOR 1KOHM 5% 1/4W	
RN1,2	677166-000.6/00	R-NETZWERK 8X10KOHM JUEGO DE RESISTENCIAS 8X10KOHM	RESISTOR ARRAY 8X10KOHM	
S1	563157-010.6/00	KODIERSCHALTER 10 POLIG INTERRUPTOR CODIFICADOR 10 TERMINALES	CODING SWITCH 10 POLE	
TR1	67.600-3169.2/00	UEBERTRAGER TRANSMISOR	TRANSDUCER	
TS1,2	675144-000.6/00	TRANSISTOR BC327 TRANSISTOR BC327	TRANSISTOR BC327	
X1	562370-000.6/00	BUCHSENGEHAEUSE 25 POLIG CAJA DE CONECTOR 25 TERMINALES	SOCKET HOUSING 25 POLE	
XT1	698511-000.6/00	QUARZ 5,0688MHZ OSCILADOR DE CUARZO 5,0688MHZ	QUARTZ 5,0688MHZ	

10.3 Schnittstelle RS232C FIFO
Interface RS232C FIFO
Jonction RS232C FIFO
Interface RS232C FIFO

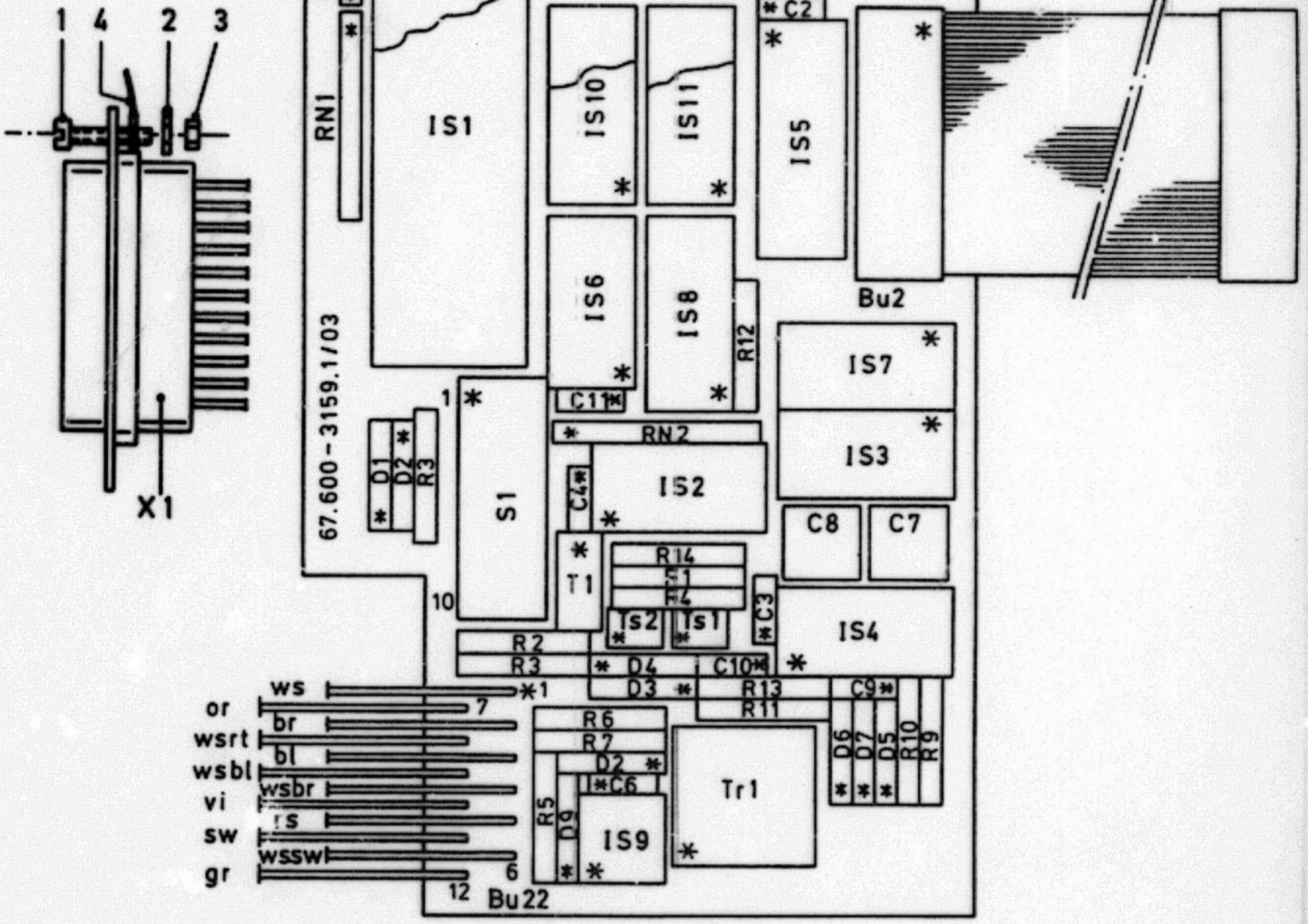

10.4 Schnittstelle IEC-BUS
Interface IEC-BUS
Jonction IEC-BUS
Interface IEC-BUS

Pos.-Nr./Bauteil Pos. no./Comp.	Bestell-Nr. Ref. no.	Benennung Deutsch Denominación Español	Term English	Farbe Color
	67.550-3150.2/06	SCHNITTSTELLE IEC-BUS INTERFACE IEC-BUS	INTERFACE IEC-BUS	
1	311425-000.6/00	KREUZSCHLITZSCHRAUBE M2,5X10 TORNILLO DE ESTRELLA M2,5X10	RECESSED HEAD SCREW M2,5X10	
2	034259-000.6/00	SCHEIBE ARANDELA	WASHER	
3	331100-000.6/00	SECHSKANTMUTTER M2,5X2 TUERCA EXAGONAL M2,5X2	HEXAGONAL NUT M2,5X2	
4	67.600-3019.2/00	MASSEBAND CABLE DE MASA	GROUND CABLE	
BU2	67.550-3154.2/00	FLACHBANDLEITER 20 POLIG MANGUERA PLANA 20 TERMINALES	FLAT CABLE 20 POLE	
C1...4,6,7	662441-000.6/00	KER-KONDENSATOR 100NF 50V CONDENSADOR CERAMICO 100NF 50V	CERAMIC CONDENSER 100NF 50V	
C11	662495-000.6/00	KER-KONDENSATOR 2,2NF 63V CONDENSADOR CERAMICO 2,2NF 63V	CERAMIC CONDENSER 2,2NF 63V	
C5	662468-000.6/00	KONDENSATOR 330PF 63V CONDENSADOR 330PF 63V	CONDENSER 330PF 63V	
C9	661205-000.6/00	TANTAL-ELKO 10UF 16V CONDENSADOR ELECTROL. TANTALO 10UF 16V	TANTALUM CONDENSER 10UF 16V	
IS1	676340-000.6/00	8FACH-LATCH 74LS373 "LATCH" OCTUPLE 74LS373	8FOLD LATCH 74LS373	
IS2	676218-000.6/00	4FACH-NOR-TREIBER 74LS33 EXCITADOR NOR CUADRUPLE 74LS33	4FOLD NOR DRIVER 74LS33	
IS3	676260-000.6/00	2FACH-NAND-GATTER 74LS20 PUERTA NAND DOBLE 74LS20	2FOLD NAND GATE 74LS20	
IS4,10	676202-000.6/00	4FACH-NAND-GATTER 74LS00 PUERTA NAND CUADRUPLE 74LS00	4FOLD NAND GATE 74LS00	
IS5	676231-000.6/00	3FACH-NAND-GATTER 74LS10 PUERTA NAND TRIPLE 74LS10	3FOLD NAND GATE 74LS10	
IS6	676261-000.6/00	4FACH-EX-OR-GATTER 74LS86 PUERTA EX-OR CUADRUPLE 74LS86	4FOLD EX-OR GATE 74LS86	
IS7	676193-000.6/00	4FACH-NAND-GATTER 7438 PUERTA NAND CUADRUPLE 7438	4FOLD NAND GATE 7438	
IS8	676201-000.6/00	6FACH-INVERTER 74LS04 INVERSORA SEXTUPLE 74LS04	6FOLD INVERTER 74LS04	
IS9	676203-000.6/00	4FACH-NOR-GATTER 74LS02 PUERTA NOR CUADRUPLE 74LS02	4FOLD NOR GATE 74LS02	
R2	663674-320.6/00	KOSCHIWI 1,2KOHM 5% 1/4W RESISTENCIA DE CARBON 1,2KOHM 5% 1/4W	RESISTOR 1,2KOHM 5% 1/4W	
RN1,3,5	677171-000.6/00	R-NETZWERK 8X3KOHM JUEGO DE RESISTENCIAS 8X3KOHM	RESISTOR ARRAY 8X3KOHM	
RN2,4	677172-000.6/00	R-NETZWERK 8X6,2KOHM JUEGO DE RESISTENCIAS 8X6,2KOHM	RESISTOR ARRAY 8X6,2KOHM	

10. STANDARD Schnittstellen/STANDARD interfaces
STANDARD jonctions/ESTANDAR interfaces

10.4 Schnittstelle IEC-BUS
Interface IEC-BUS
Jonction IEC-BUS
Interface IEC-BUS

Pos.-Nr./Bauteil Pos. no./Comp.	Bestell-Nr. Ref. no.	Benennung Deutsch Denominacion Español	Term English	Farbe Color
S1	563142-000.6/00	KODIERSCHALTER INTERRUPTOR CODIFICADOR	CODING SWITCH	
X1	562576-000.6/00	GERAETEBUCHSE 24 POLIG ENCHUFE DE MAQUINA 24 TERMINALES	APPLIANCE INLET 24 POLE	

10.4 Schnittstelle IEC-BUS
Interface IEC-BUS
Jonction IEC-BUS
Interface IEC-BUS

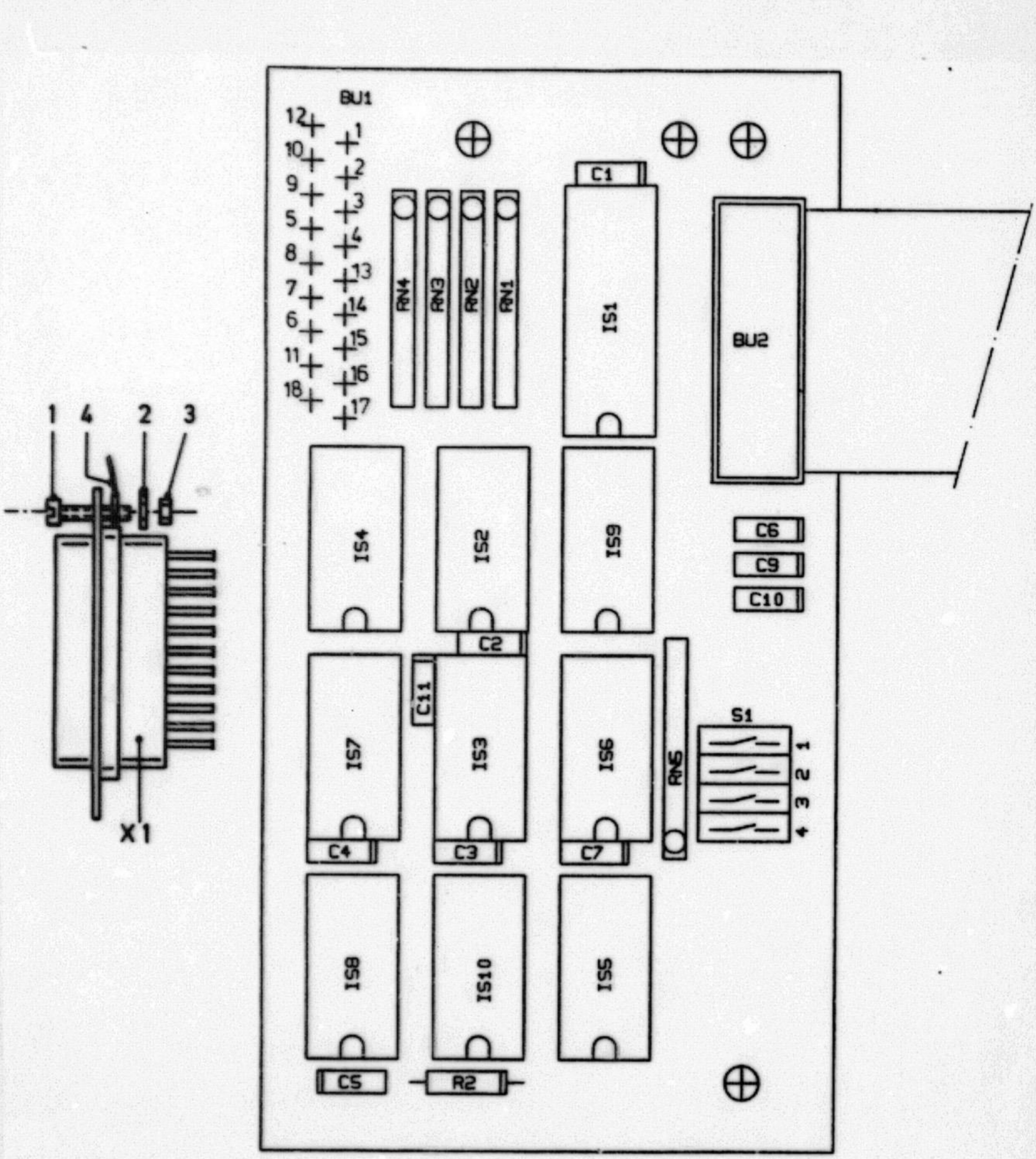

11. OLYMPIA Schnittstellen/OLYMPIA interfaces
OLYMPIA jonctions/OLYMPIA interfaces

11.1 Schnittstelle RS232C-CENTRONICS
Interface RS232C-CENTRONICS
Jonction RS232C-CENTRONICS
Interface RS232C-CENTRONICS

Pos.-Nr./Bauteil Pos. no./Comp.	Bestell-Nr. Ref. no.	Benennung Deutsch Denominación Español	Term English	Farbe Color
1	67.400-3081.2/00	SCHNITTSTELLENLEITERPLATTE PLACA DE INTERFACE	INTERFACE PCB	
1	67.400-3081.5/00	REP.-SCHNITTSTELLENLEITERPLATTE PLACA INTERFACE REPARADA	EXCH. INTERFACE PCB	
2	67.400-3223.2/00	LEITUNGSBUENDEL CENTRONICS MANGUERA DE CABLES CENTRONICS	CABLE HARNESS CENTRONICS	
3	67.400-3225.2/00	LEITUNGSBUENDEL V34 MANGUERA DE CABLES V34	CABLE HARNESS V34	
C1,8,12	662438-000.6/00	KER-KONDENSATOR 150PF 63V CONDENSADOR CERAMICO 150PF 63V	CERAMIC CONDENSER 150PF 63V	
C10,11	661205-000.6/00	TANTAL-ELKO 10UF 16V CONDENSADOR ELECTROL. TANTALO 10UF 16V	TANTALUM CONDENSER 10UF 16V	
C2-5	662468-000.6/00	KONDENSATOR 330PF 63V CONDENSADOR 330PF 63V	CONDENSER 330PF 63V	
C6,80	662483-000.6/00	KONDENSATOR 22PF 63V CONDENSADOR 22PF 63V	CONDENSER 22PF 63V	
C9	662469-000.6/00	KONDENSATOR 3,3NF CONDENSADOR 3,3NF 63V	CONDENSER 3,3NF	
D1-3	672100-000.6/00	DIODE 1N4148 DIODO 1N4148	DIODE 1N4148	
IS 1	676367-000.6/00	8FACH-LATCH 74HCT373 "LATCH" OCTUPLE 74HCT373	8FOLD LATCH 74HCT373	
IS 2	676170-000.6/00	4FACH-NAND-GATTER 74LS03 PUERTA NAND CUADRUPLE 74LS03	4FOLD NAND GATE 74LS03	
IS 3	679133-000.6/00	8FACH-BUS-TREIBER 74HTC244 EXCITADOR BUS OCTUPLE 74HTC244	8FOLD BUS DRIVER 74HTC244	
IS 4	676134-000.6/00	6FACH-INVERTER 7406 INVERSORA SEXTUPLE 7406	6FOLD INVERTER 7406	
IS 5	676542-000.6/00	4FACH-LEITUNGSTREIBER 1488 EXCITADOR CUADRUPLE 1488	4FOLD DRIVER 1488	
IS 6	676539-000.6/00	4FACH-EMPFAENGER 75189 RECEPTOR CUADRUPLE 75189	4FOLD RECEIVER 75189	
IS 7	676375-000.6/00	2FACH-D-FLIP-FLOP 74HTC74 FLIP-FLOP D DOBLE 74HTC74	2FOLD D FLIP-FLOP 74HTC74	
IS 8	676625-000.6/00	OSZILLATOR 74LS629 OSCILADOR 74LS629	OSCILLATOR 74LS629	
IS 9	676881-000.6/00	USART C2661 USART C2661	USART C2661	
IS10	676886-000.6/00	PROGRAMM-LOGIK 16L8LPC LOGICA DE PROGRAMA 16L8LPC	PROGRAM LOGIC 16L8LPC	
IS11	651520-019.8/00	32K-EPROM 27256 (1520-019/XX) EPROM DE 32K 27256 (1520-019/XX) T352/K352	32K EPROM 27256 (1520-019/XX)	

11. OLYMPIA Schnittstellen/OLYMPIA interfaces

OLYMPIA jonctions/OLYMPIA interfaces

11.1 Schnittstelle RS232C-CENTRONICS
Interface RS232C-CENTRONICS
Jonction RS232C-CENTRONICS
Interface RS232C-CENTRONICS

Pos.-Nr./Bauteil Pos. no./Comp.	Bestell-Nr. Ref. no.	Benennung Deutsch Denominacibn Español	Term English	Farbe Color
IS11	651520-020.8/00	32K-EPROM 27256 (1520-020/XX) EPROM DE 32K 27256 (1520-020/XX) T846/K846	32K EPROM 27256 (1520-020/XX)	
IS11	651520-021.8/00	32K-EPROM 27256 (1520-021/XX) EPROM DE 32K 27256 (1520-021/XX) T827/K827	32K EPROM 27256 (1520-021/XX)	
IS11	651520-022.8/00	32K-EPROM 27256 (1520-022/XX) EPROM DE 32K 27256 (1520-022/XX) T864/K864	32K EPROM 27256 (1520-022/XX)	
IS11	651520-023.8/00	32K-EPROM 27256 (1520-023/XX) EPROM DE 32K 27256 (1520-023/XX) T763/K763	32K EPROM 27256 (1520-023/XX)	
IS11	651520-024.8/00	32K-EPROM 27256 (1520-024/XX) EPROM DE 32K 27256 (1520-024/XX) T840/K840	32K EPROM 27256 (1520-024/XX)	
IS11	651520-007.8/00	32K-EPROM 27256 (1520-007/XX) EPROM DE 32K 27256 (1520-007/XX) T558/K558	32K EPROM 27256 (1520-007/XX)	
IS11	651520-010.8/00	32K-EPROM 27256 (1520-010/XX) EPROM DE 32K 27256 (1520-010/XX) T654/K654	32K EPROM 27256 (1520-010/XX)	
IS11	651520-005.8/00	32K-EPROM 27256 (1520-005/XX) EPROM DE 32K 27256 (1520-005/XX) T763/K763	32K EPROM 27256 (1520-005/XX)	
IS11	651520-001.8/00	32K-EPROM 27256 (1520-001/XX) EPROM DE 32K 27256 (1520-001/XX) T766/K766	32K EPROM 27256 (1520-001/XX)	
IS11	651520-018.8/00	32K-EPROM 27256 (1520-018/XX) EPROM DE 32K 27256 (1520-018/XX) T769/K769	32K EPROM 27256 (1520-018/XX)	
IS11	651520-002.8/00	32K-EPROM 27259 (1520-002/XX) EPROM DE 32K 27259 (1520-002/XX) T782/K782	32K EPROM 27259 (1520-002/XX)	
IS11	651520-004.8/00	32K-EPROM 27256 (1520-004/XX) EPROM DE 32K 27256 (1520-004/XX) T783/K783	32K EPROM 27256 (1520-004/XX)	
IS11	651520-011.8/00	32K-EPROM 27256 (1520-011/XX) EPROM DE 32K 27256 (1520-011/XX) T784/K784	32K EPROM 27256 (1520-011/XX)	
IS11	651520-009.8/00	32K-EPROM 27256 (1520-009/XX) EPROM DE 32K 27256 (1520-009/XX) T785/K785	32K EPROM 27256 (1520-009/XX)	
IS11	651520-008.8/00	32K-EPROM 27256 (1520-008/XX) EPROM DE 32K 27256 (1520-008/XX) T798/K798	32K EPROM 27256 (1520-008/XX)	

11. OLYMPIA Schnittstellen/OLYMPIA interfaces
OLYMPIA jonctions/OLYMPIA interfaces

11.1 Schnittstelle RS232C-CENTRONICS
Interface RS232C-CENTRONICS
Jonction RS232C-CENTRONICS
Interface RS232C-CENTRONICS

Pos.-Nr./Bauteil Pos. no./Comp.	Bestell-Nr. Ref. no.	Benennung Deutsch Denominación Español	Term English	Farbe Color
IS11	651520-017.8/00	32K-EPROM 27256 (1520-017/XX) EPROM DE 32K 27256 (1520-017/XX) T806/K806	32K EPROM 27256 (1520-017/XX)	
IS11	651520-003.8/00	32K-EPROM 27256 (1520-003/XX) EPROM DE 32K 27256 (1520-003/XX) T809/K809	32K EPROM 27256 (1520-003/XX)	
IS11	651520-012.8/00	32K-EPROM 27256 (1520-012/XX) EPROM DE 32K 27256 (1520-012/XX) Z821/K821	32K EPROM 27256 (1520-012/XX)	
IS11	651520-013.8/00	32K-EPROM 27256 (1520-013/XX) EPROM DE 32K 27256 (1520-013/XX) T841/K841	32K EPROM 27256 (1520-013/XX)	
IS11	651520-006.8/00	32K-EPROM 27256 (1520-006/XX) EPROM DE 32K 27256 (1520-006/XX) T850/K850	32K EPROM 27256 (1520-006/XX)	
IS11	679735-000.6/00	32K-EPROM 27256 OHNE PROGR. EPROM DE 32K 27256 SIN PROGRAMA	32K EPROM 27256 WITHOUT PROGR.	
IS12	676826-000.6/00	MIKROPROZESSOR 3880 MICROPROCESADOR 3880	MICROPROCESSOR 3880	
IS13	679721-000.6/00	8K-STATIK-RAM 4364 RAM ESTATICA 8K 4364	8K STATIC RAM 4364	
IS14	676825-000.6/00	I/O-CONTROLLER Z80 CONTROLADOR ENTRADA/SALIDA Z80	I/O CONTROLLER Z80	
O.ILLUSTR.	676989-000.6/00	SOCKEL 28 POLIG ZOCALO 28 TERMINALES	SOCKET 28 POLE	
O.ILLUSTR.	676981-000.6/00	SOCKEL 40 POLIG ZOCALO 40 TERMINALES	SOCKET 40 POLE	
R1,14,17,90,130	663672-320.6/00	KOSCHIWI 1KOHM 5% 1/4W RESISTENCIA DE CARBON 1KOHM 5% 1/4W	RESISTOR 1KOHM 5% 1/4W	
R15,151	663496-320.6/00	KOSCHIWI 10KOHM 5% 1/4W RESISTENCIA DE CARBON 10KOHM 5% 1/4W	RESISTOR 10KOHM 5% 1/4W	
R18	663669-320.6/00	KOSCHIWI 330 OHM 5% 1/4W RESISTENCIA DE CARBON 330 OHM 5% 1/4W	CARBON RESISTOR 330 OHM 5% 1/4W	
R19	663484-320.6/00	KOSCHIWI 3,3KOHM 5% 1/4W RESISTENCIA DE CARBON 3,3KOHM 5% 1/4W	RESISTOR 3,3KOHM 5% 1/4W	
R2,3,7-12,16	663682-320.6/00	KOSCHIWI 2,7KOHM 5% 1/4W RESISTENCIA DE CARBON 2,7KOHM 5% 1/4W	RESISTOR 2,7KOHM 5% 1/4W	
R20,21	663448-320.6/00	KOSCHIWI 100 OHM 5% 1/4W RESISTENCIA DE CARBON 100 OHM 5% 1/4W	RESISTOR 100 OHM 5% 1/4W	
R4-6	663480-320.6/00	KOSCHIWI 2,2KOHM 5% 1/4W RESISTENCIA DE CARBON 2,2KOHM 5% 1/4W	RESISTOR 2,2KOHM 5% 1/4W	
R60,70	663682-320.6/00	KOSCHIWI 2,7KOHM 5% 1/4W RESISTENCIA DE CARBON 2,7KOHM 5% 1/4W	RESISTOR 2,7KOHM 5% 1/4W	

11.1 Schnittstelle RS232C-CENTRONICS
Interface RS232C-CENTRONICS
Jonction RS232C-CENTRONICS
Interface RS232C-CENTRONICS

Pos.-Nr./Bauteil Pos. no./Comp.	Bestell-Nr. Ref. no.	Benennung Deutsch Denominacibn Español	Term English	Farbe Color
RN1,2,3	677171-000.6/00	R-NETZWERK 8X3KOHM JUEGO DE RESISTENCIAS 8X3KOHM	RESISTOR ARRAY 8X3KOHM	
RN5,6	677172-000.6/00	R-NETZWERK 8X6,2KOHM JUEGO DE RESISTENCIAS 8X6,2KOHM	RESISTOR ARRAY 8X6,2KOHM	
S1	563153-001.6/00	DIL-SCHALTER 1 POLIG CONMUTADOR "DIL" 1 TERMINALES	DIL SWITCH 1 POLE	
St2	562362-020.6/00	STIFTLEISTE 20 POLIG CONECTOR 20 TERMINALES	CONNECTOR STRIP 20 POLE	
St33	562362-012.6/00	STIFTLEISTE 12 POLIG CONECTOR 12 TERMINALES	CONNECTOR STRIP 12 POLE	
St4	561800-000.6/00	FLACHSTECKER CONECTOR PLANO	FLAT CONNECTOR	
TR1	67.800-3169.2/00	UEBERTRAGER TRANSMISOR	TRANSDUCER	
TS1	675144-000.6/00	TRANSISTOR BC327 TRANSISTOR BC327	TRANSISTOR BC327	
TS2	675162-000.6/00	TRANSISTOR BC337 TRANSISTOR BC337	TRANSISTOR BC337	
XT1	698511-000.6/00	QUARZ 5,0688MHZ OSCILADOR DE CUARZO 5,0688MHZ	QUARTZ 5,0688MHZ	
ZD1	672396-000.6/00	Z-DIODE ZPD12 12V DIODO ZENER ZPD12 12V	Z DIODE ZPD12 12V	

11.1 Schnittstelle RS232C-CENTRONICS
Interface RS232C-CENTRONICS
Jonction RS232C-CENTRONICS
Interface RS232C-CENTRONICS

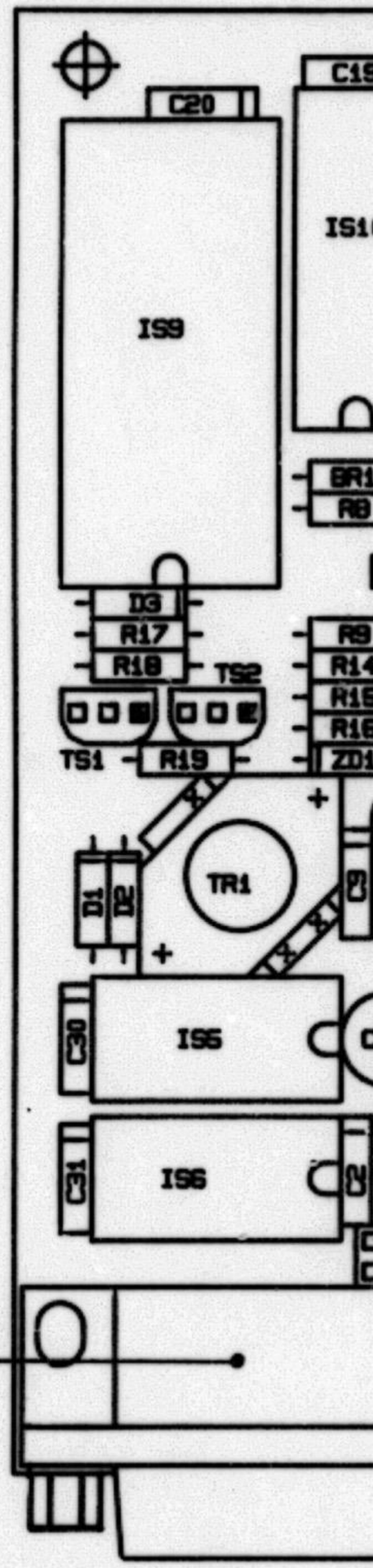

Im Lieferumfang de
Not included in the
No se suministra co

los interfaces

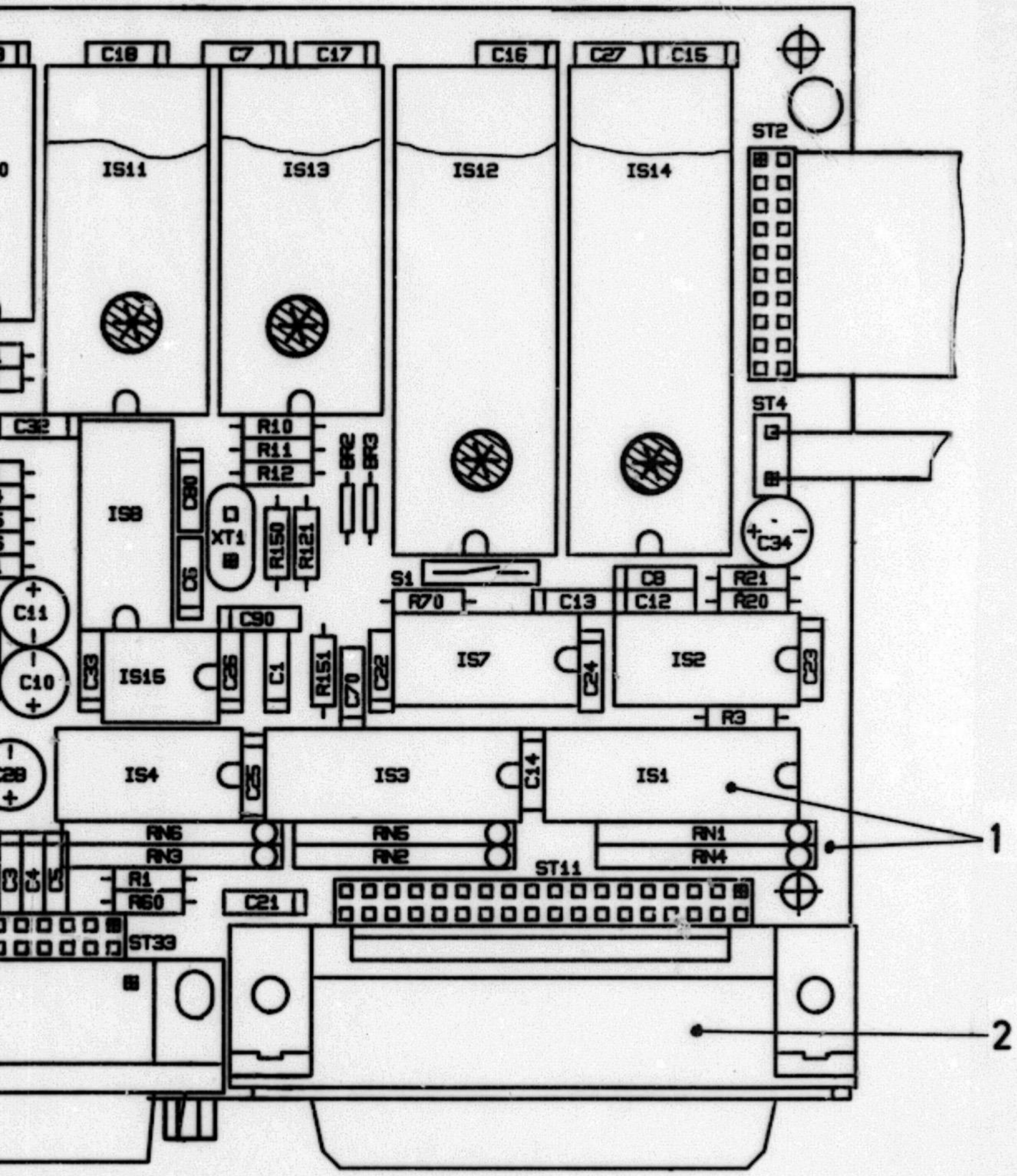

r Leiterplatte nicht enthalten. Vor Einsendung als Austauschteil entfernen.
scope of delivery of the PCB. Remove before returning as an exchange assembly.
n la placa electrónica. Hay que retirar la pieza antes de enviar la placa.

12. Transportsicherungen/Transport safety device
Transport verrouillage sécurité/Protecciones para transporte

12.1 Transportsicherungen
Transport safety device
Transport verrouillage sécurité
Protecciones para transporte

Pos.-Nr./Bauteil Pos. no./Comp.	Bestell-Nr. Ref. no.	Benennung Deutsch Denominacibn Español	Term English	Farbe Color
3	67.001-4543.1/00	POLSTER GOMA-ESPUMA	CUSHION	
4	67.200-4770.1/00	STUETZE SOPORTE	SUPPORT	
5	67.001-4662.1/01	ZUGSCHLAUFE BANDA DE TRACCION	TENSION LOOP	
6	67.101-4525.1/00	TRANSPORTSICHERUNG PROTECCION DE TRANSPORTE	TRANSPORT SAFETY DEVICE	
7	67.200-4771.1/00	ROHR 105MM TUBO 105MM	TUBE 4,1INCH	
8	312325-008.8/00	ZYLINDERSCHRAUBE M5X14 TORNILLO CILINDRICO M5X14	PAN-HEADED SCREW M5X14	
9	87.001-4591.1/00	TRANSPORTSICHERUNG PROTECCION DE TRANSPORTE	TRANSPORT SAFETY DEVICE	
10	012556-000.6/00	ZYLINDERSCHRAUBE M4X15 TORNILLO CILINDRICO M4X15	PAN-HEADED SCREW M4X15	
11	25.200-4544.1/00	WEICHSCHAUM-ZUSCHNITT TROZO DE ESPUMA AMORTIGUADORA	FOAM PACKING PIECE	

12. Transportsicherungen/Transport safety device
Transport verrouillage sécurité/Protecciones para transporte

12.1 Transportsicherungen
Transport safety device
Transport verrouillage sécurité
Protecciones para transporte

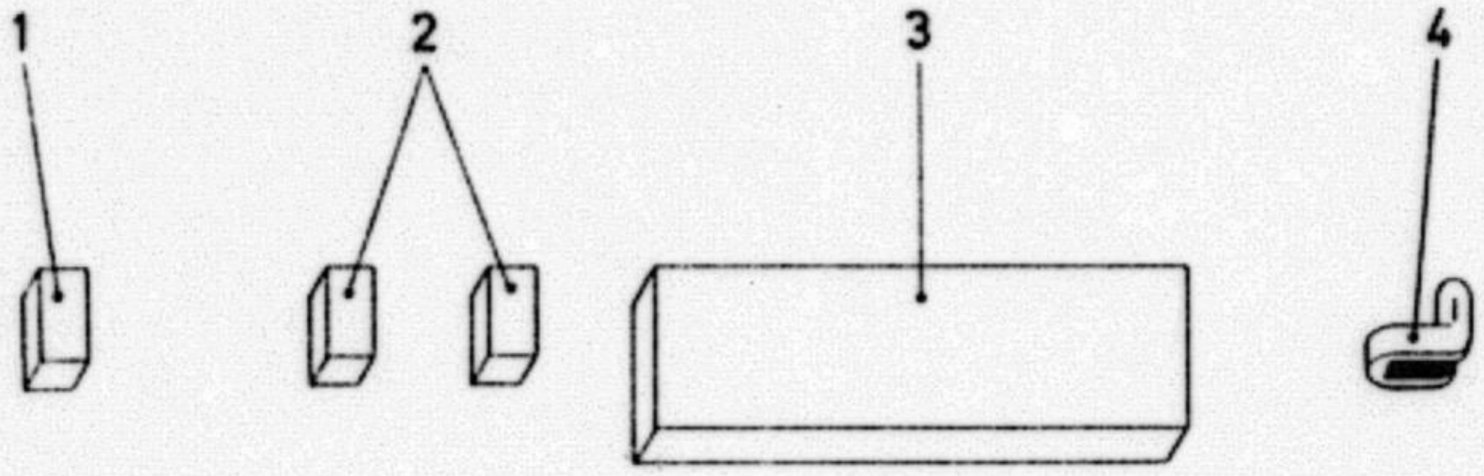

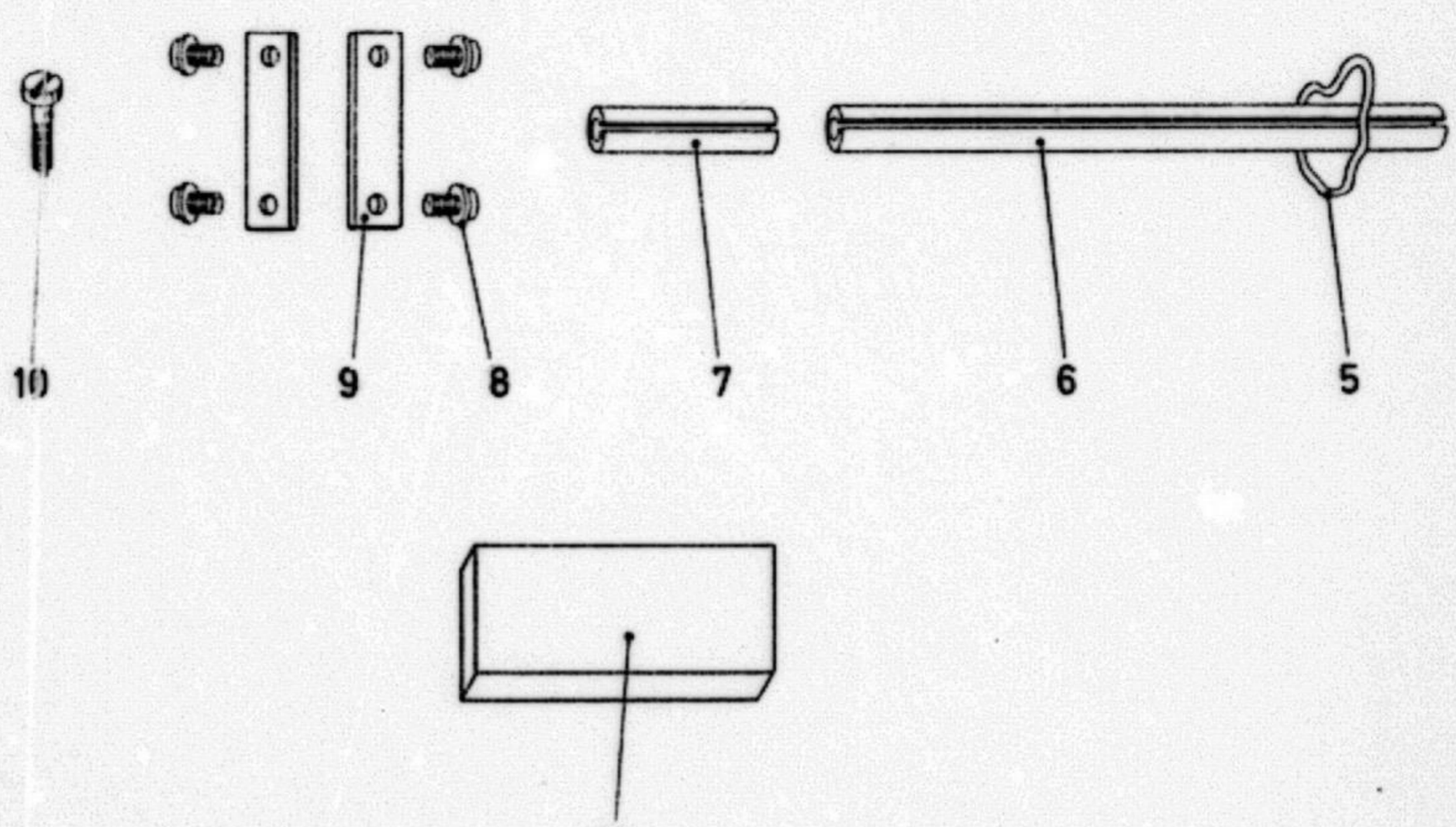

Ersatzteilkatalog
Spare parts catalog
Catalogue de pièces de rechange
Catálogo de Repuestos

AEG
OLYMPIA

ESW 3000/3000K

Service Department

Inhalt

		Seite	Fiche
1.	**Bekleidung/**Housing		
1.1	Bekleidung/ Housing	01-001	F3
2.	**Gestell, Papiertraeger/**Chassis, Paper carrier		
2.1	Gestell/ Chassis	02-001	F6
2.2	Papiertraeger (1)/ Paper carrier (1)	02-002	F9
2.3	Papiertraeger (2)/ Paper carrier (2)	02-003	F11
3.	**Druckwerk/**Printer		
3.1	Druckwerk, Typenradtraeger/ Printer, Typewheel carrier	03-001	F13
3.2	Farbbandtransport, Korrektureinrichtung/ Ribbon transport, Correction device	03-002	F15
3.3	Druckwerksleiterplatte/ Printer pcb	03-003	F18
4.	**Stromversorgung/**Power supply		
4.1	Stromversorgung, getaktet/ Power supply, Pulsed	04-001	F20
4.2	Leiterplatte Spannungsregelung/ Pcb voltage regulation	04-002	F24
5.	**Elektronik/**Electronics		
5.1	Printercontroller/ Printer controller	05-001	G3
5.2	Modecontroller/ Mode controller	05-002	G8
5.3	Verteilerplatte/ Distributor pcb	05-003	G10
5.4	Leiterplatte SASCON 87/ Pcb SASCON 87	06-001	
8.	**Bedienfeld/**Control panel		
8.1	Tastatur/ Keyboard	08-001	G12
8.2	Bedienfeld/ Control panel	08-002	G15
10.	**STANDARD Schnittstellen/**STANDARD interfaces		
10.1	Schnittstelle RS232C (V24)/ Interface RS232C (V24)	10-001	G17
10.2	Schnittstelle RS232C FIFO/ Interface RS232C FIFO	10-002	G19
10.3	Schnittstelle CENTRONICS/ Interface CENTRONICS	10-003	G21
10.4	Schnittstelle IEC-BUS/ Interface IEC-BUS	10-004	G23
20.	**Tastenknoepfe/**Keytops		
20.1	Bestellhinweise/ Information in connecting with the ordering	20-001	H3
20.2	352.952 Holländisch 3 (ASCII)/ Dutch 3 (ASCII)	20-002	H4
20.3	558.952 Englisch (ASCII)/ English (ASCII)	20-003	H6
20.4	654.952 Anglo-Universal (ASCII)/ Anglo-Universal (ASCII)	20-004	H8
20.5	760.952 Italienisch 4 (ASCII)/ Italian 4 (ASCII)	20-005	H10
20.6	763.952 Französisch 6 (ASCII)/ French 6 (ASCII)	20-006	H12
20.7	766.952 Deutsch DIN 2137 (ASCII)/ German DIN 2137 (ASCII)	20-007	H14
20.8	769.952 Norwegisch-Normen 2 (ASCII)/ Norwegian Standard 2 (ASCII)	20-008	H16
20.9	782.952 Schweiz 8 (ASCII)/ Swiss 8 (ASCII)	20-009	H18
20.10	783.952 Französisch 10 (Schweiz) (ASCII)/ French 10 (Swiss) (ASCII)	20-010	H20
20.11	784.952 Afrikaans 3 (ASCII)/ Afrikaans 3 (ASCII)	20-011	H22
20.12	785.952 Finnisch-Normen 2 (ASCII)/ Finnish Standard 2 (ASCII)	20-012	H24
20.13	798.953 Amerikanisch 3 (ASCII)/ American 3 (ASCII)	20-013	H26
20.14	806.952 Dänisch 6 (ASCII)/ Danish 6 (ASCII)	20-014	I5
20.15	809.952 Luxemburg 2 (ASCII)/ Luxembourg 2 (ASCII)	20-015	I5
20.16	811.952 Spanisch 4 (ASCII)/ Spanish 4 (ASCII)	20-016	I7
20.17	812.952 Portugiesisch (ASCII)/ Portuguese (ASCII)	20-017	I9

1. Bekleidung/Housing

1.1 Bekleidung
Housing

Pos.-Nr./Bauteil Pos. no./Comp.	Bestell-Nr. Ref. no.	Benennung Deutsch	Term English	Farbe Color
1	87.001-4530.1/00	KNOPF F. NETZSCHALTER	KNOB FOR POWER SWITCH	F111
2	87.001-4533.1/00	KAPPE LKS.	CAP L.H.	F296
3	87.001-4538.1/00	PAPIERLEITPLATTE	PAPER GUIDE PLATE	F296
4	67.001-4660.1/02	PAPIERANLAGE	PAPER GUIDE	F313
5	87.001-4540.1/00	BLENDSCHUTZ	ANTIDAZZLE HOOD	F296
6	87.001-3026.1/00	KUEHLSCHIENE	HEAT SINK	
7	87.001-3023.2/04	PRINTERCONTROLLER	PCB PRINTER CONTROLLER	
8	566311-050.6/00	KARTENHALTER	CARD HOLDER	
9	87.001-3031.2/00	LEITEPPLATTE MODECONTROLLER	PCB MODECONTROLLER	
10	87.001-3027.1/00	KONTAKTFEDER	CONTACT SPRING	
11	87.002-3035.2/00	STECKER	PLUG	
12	87.001-4506.1/00	PLATTE FUER STECKER	PLATE FOR PLUG	
13	87.001-3042.2/00	SCHNITTSTELLE CENTRONICS	INTERFACE CENTRONICS	
13	87.001-3150.2/00	SCHNITTSTELLE IEC-BUS	INTERFACE IEC-BUS	
13	87.001-3158.2/03	SCHNITTSTELLE RS232C (V24)	INTERFACE RS232C (V24)	
13	87.001-3228.2/01	SCHNITTSTELLE RS232C-FIFO	INTERFACE RS232C-FIFO	
14	312603-060.6/00	KREUZSCHLITZSCHRAUBE	RECESSED HEAD SCREW	
15	566311-050.6/00	KARTENHALTER	CARD HOLDER	
16	87.001-3010.2/00	FLANSCHSTECKDOSE	SOCKET STRIP	
17	87.001-3432.1/00	TASTENKNOPF	KEYTOP	F313
18	87.001-3002.2/04	VERTEILERPLATTE	DISTRIBUTOR PCB	
19	562843-018.6/00	BUCHSENGEHAEUSE 18 POLIG	SOCKET HOUSING 18 POLE	
20	87.001-3427.1/00	TASTENKNOPF	KEYTOP	F313
21	87.001-4532.1/00	KAPPE RTS.	CAP R.H.	F296
22	312506-000.6/00	ZYLINDERSCHRAUBE	PAN-HEADED SCREW	
23	331100-000.6/00	SECHSKANTMUTTER M2,5X2	HEXAGONAL NUT M2,5X2	
24	034259-000.6/00	SCHEIBE	WASHER	
25	312635-009.6/00	SELBSTSCHNEIDESCHRAUBE	SELF-TAPPING SCREW	
26	562843-002.6/00	BUCHSENGEHAEUSE 2 POLIG	SOCKET HOUSING 2 POLE	
27	87.001-4537.1/00	ABDECKKAPPE	CAP	
28	87.001-4554.1/00	FORMTEIL	PREFORM	
29	87.001-3450.2/00	DECKELSCHALTER KPL.	SWITCH FOR COVER ASSY.	
30	87.001-4514.2/00	SEITENTEIL	SIDE PLATING	F296
30	87.004-4514.2/00	SEITENTEIL RTS. ESW 3000K	SIDE PART R.H. ESW 3000K	F296
31	562456-037.6/00	BUCHSENGEHAEUSE 37 POLIG	SOCKET HOUSING 37 POLE	
32	012550-000.6/00	ZYLINDERSCHRAUBE M4X5	PAN-HEADED SCREW M4X5	
33	035105-060.6/00	ZAHNSCHEIBE	TOOTHED LOCK WASHER	
34	87.001-4521.2/00	BLENDE KPL. ESW 3000RO	PANEL ASSY. ESW 3000RO	F296
34	87.004-4521.2/00	BLENDE KPL. ESW 3000K	PANEL ASSY. ESW 3000K	F296
35	87.001-4502.2/00	BODENWANNE KPL.	BASE PLATE ASSY.	F630
36	562867-000.6/00	WINKEL	ANGLE	
37	87.004-3005.2/00	FLACHBANDLEITUNG XPL.	FLAT CABLE ASSY.	
38	67.650-4160.1/00	TASTENSCHALTER MIT LED	KEY SWITCH WITH LED	

1. Bekleidung/Housing

1.1 Bekleidung
Housing

Pos.-Nr./Bauteil Pos. no./Comp.	Bestell-Nr. Ref. no.	Benennung Deutsch	Term English	Farbe Color
39	87.001-3428.1/00	TASTENKNOPF	KEYTOP	F313
40	87.001-3425.1/00	TASTENSCHALTER	KEY SWITCH	
41	87.001-3426.1/00	TASTENKNOPF	KEYTOP	F313
42	87.001-3433.1/00	TASTENKNOPF	KEYTOP	F313
43	67.650-4162.1/00	TASTENSCHALTER	KEY SWITCH	
44	87.001-3431.1/00	TASTENKNOPF ON/OFF-LINE	KEYTOP ON/OFF-LINE	F313
45	67.650-4161.1/00	TASTENSCHALTER MIT LED	KEY SWITCH WITH LED	
46	671210-000.6/00	LED GELB	LED YELLOW	
47	87.001-3441.2/00	SCHIEBESCHALTER	SLIDING SWITCH	F313
48	562843-009.6/00	BUCHSENGEHAEUSE 9 POLIG	SOCKET HOUSING 9 POLE	
49	87.001-3409.2/06	BEDIENFELD KPL. ESW 3000	CONTROL PANEL ASSY. ESW 3000	F313
50	87.001-4503.1/00	KONTAKTFEDER	CONTACT SPRING	
51	312575-000.6/00	ZYLINDERSCHRAUBE M3X38	PAN-HEADED SCREW M3X38	
52	562843-003.6/00	BUCHSENGEHAEUSE 3 POLIG	SOCKET HOUSING 3 POLE	
53	034320-000.6/02	SCHEIBE	WASHER	
54	012553-000.6/00	ZYLINDERSCHRAUBE M4X8	PAN-HEADED SCREW M4X8	
55	47.001-2606.1/00	MASCHINENFUSS	MACHINE FOOT	
56	87.001-4535.1/00	GERAEUSCHABDECKUNG	NOISE MUFFLING HOOD	
57	87.001-4513.2/00	SEITENTEIL LKS. KPL.	SIDE PART L.H. ASSY.	F296
58	87.001-4547.2/00	LUEFTER	FAN	
59	87.001-4516.2/00	DECKEL	COVER	F296
60	336506-050.6/00	SCHEIBE	WASHER	F296
60	73.660-1288.1/00	RASTSCHEIBE	LATCH WASHER	F296
60	73.660-1289.1/00	RASTFEDER	DETENT SPRING	
61	87.001-4529.2/00	RUECKWAND KPL.	REAR PLATE ASSY.	F296
61	87.001-4529.2/03	RUECKWAND KPL. AB/W.E.F. MASCH. 4579003004043	REAR PLATE ASSY.	F296
62	353268-050.6/00	ABSTANDSROHR 8X2X31,5	SPACER TUBE 8X2X31,5	

1. **Bekleidung**/Housing

1.1 **Bekleidung**
Housing

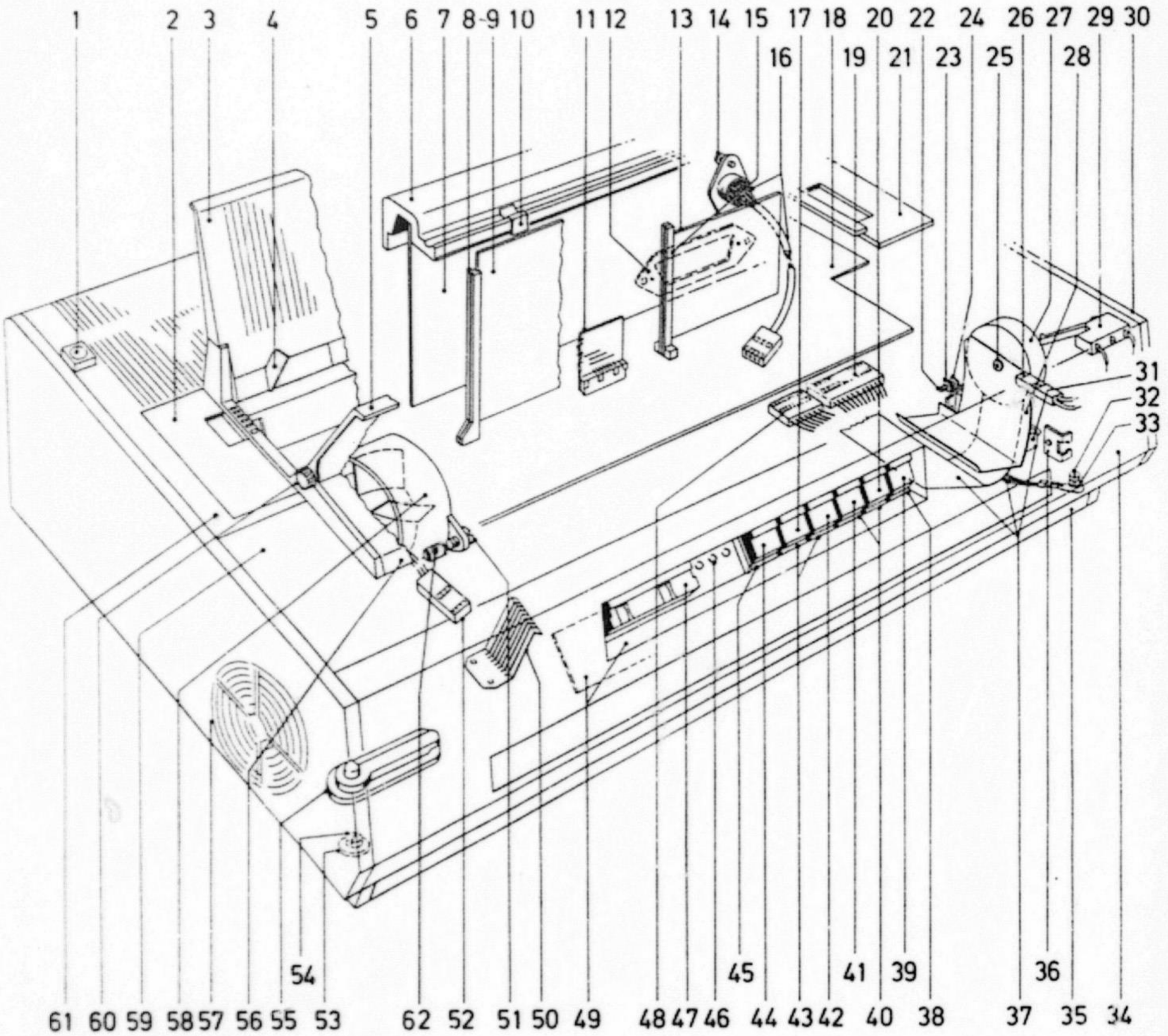

2. Gestell, Papiertraeger/Chassis, Paper carrier

2.1 Gestell
Chassis

Pos.-Nr./Bauteil Pos. no./Comp.	Bestell-Nr. Ref. no.	Benennung Deutsch	Term English	Farbe Color
1	314117-000.6/00	SECHSKANTSCHRAUBE M4X8	HEXAGONAL BOLT M4X8	
2	012528-000.6/00	ZYLINDERSCHRAUBE	PAN-HEADED SCREW	
3	67.001-1021.1/00	EXZENTERBUCHSE	ECCENTRIC BUSH	
3	87.001-1056.1/00	EXZENTERBUCHSE L.KS.	ECCENTRIC BUSH L.H.	
4	486914-000.6/00	DRUCKFEDER	COMPRESSION SPRING	
5	562843-006.6/00	BUCHSENGEHAEUSE 6 POLIG	SOCKET HOUSING 6 POLE	
6	334749-006.6/00	SCHEIBE	WASHER	
7	562843-006.6/00	BUCHSENGEHAEUSE 6 POLIG	SOCKET HOUSING 6 POLE	
8	311411-006.6/00	LINSENSCHRAUBE M4X20	OVAL-HEADED SCREW M4X20	
9	87.001-1004.1/00	FUEHRUNGSACHSE HINTEN	GUIDE SHAFT	
10	87.001-1228.1/00	GLEITRING	SLIDING ROLLER	
12	87.001-1040.2/00	OPTO-ENCODER KPL.	OPTO ENCODER ASSY.	
13	316125-000.6/00	GEWINDESTIFT M3X3	THREADED PIN M3X3	
14	353211-006.6/00	BUCHSE	BUSH	
15	562843-020.6/00	BUCHSENGEHAEUSE 20 POLIG	SOCKET HOUSING 20 POLE	
16	87.001-1035.2/00	MOTOR MIT SEILROLLE	MOTOR WITH CABLE PULLEY	
17	331304-000.6/00	SECHSKANTMUTTER M4	HEXAGONAL NUT M4	
18	311410-002.6/00	LINSENSCHRAUBE M4X9	OVAL-HEADED SCREW M4X9	
19	87.001-1206.1/00	LAGERBOLZEN	BEARING NECK	
20	484816-000.6/00	ZUGFEDER	SPRING	
21	87.001-1025.1/00	LAGERBOCK	BEARING BRACKET	
22	472611-060.6/00	KUGELLAGER	BALL BEARING	
23	87.001-1016.1/00	LAGERBOCK	BEARING BRACKET	
24	87.001-1020.1/00	STEHBOLZEN	STUD	
25	355515-006.6/00	ACHSE	SHAFT	
26	331323-006.6/00	MUTTER M8	NUT M8	
27	080014-060.6/00	TELLERFEDER	PLATE SPRING	
28	355515-006.6/00	ACHSE	SHAFT	
29	87.001-1017.1/00	SPANNER	IDLER	
30	084008-000.6/00	ZUGFEDER	TENSION SPRING	
31	87.001-1003.1/00	TRAVERSE	TRAVERSE	
32	012528-000.6/00	ZYLINDERSCHRAUBE	PAN-HEADED SCREW	
33	356213-006.6/00	ACHSE	SHAFT	
34	334402-000.6/00	SCHEIBE	WASHER	
35	87.001-1208.1/00	ANSCHLAGLEISTE	STOP	
36	87.001-1209.1/00	GLEITSCHUH	SLIDING SHOE	
37	012527-000.6/00	ZYLINDERSCHRAUBE M3X5	PAN-HEADED SCREW M3X5	
38	562843-020.6/00	BUCHSENGEHAEUSE 20 POLIG	SOCKET HOUSING 20 POLE	
39	87.001-1224.1/00	HALTERUNG	MOUNTING	
40	084154-000.6/00	ZUGFEDER	TENSION SPRING	
41	87.001-1214.2/00	ROLLENHEBEL KPL.	ROLLER LEVER	
42	034055-000.6/00	SCHEIBE	WASHER	
43	87.001-1202.2/00	WAGEN	CARRIAGE	

2. Gestell, Papiertraeger/Chassis, Paper carrier

2.1 Gestell
Chassis

Pos.-Nr./Bauteil Pos. no./Comp.	Bestell-Nr. Ref. no.	Benennung Deutsch	Term English	Farbe Color
44	87.001-1210.2/00	ROLLENHEBEL KPL.	ROLLER LEVER ASSY.	
45	87.001-1203.2/00	FUEHRUNGSROLLE	GUIDE ROLLER	
46	87.001-1005.1/00	FUEHRUNGSACHSE VORNE	GUIDE SHAFT	
47	312623-062.6/00	LINSENSCHRAUBE	OVAL-HEADED SCREW	
48	73.660-1232.1/00	SCHEIBE	WASHER	
49	73.660-1228.1/00	SCHWINGUNGSDAEMPFER	OSCILLATION DAMPER	
50	318309-060.6/00	BLECHSCHRAUBE 4,2X19	SELF-TAPPING SCREW 4,2X19	
51	87.001-1220.2/00	KABELBAUM	CABLE HARNESS	
52	87.001-1027.2/00	SEIL KPL.	CABLE ASSY.	
53	87.001-1049.1/00	WINKELHEBEL	BELL CRANC	
54	87.001-1006.1/00	SEITENWAND	SIDE PLATE	
55	87.001-1014.1/00	PUFFER	BUFFER	
56	87.001-1007.1/01	LAGER FUER UMLENKROLLE	BEARING FOR DEFLECTION ROLLER	
57	87.001-4505.1/00	SICHERUNGSBOLZEN	BOLT	
58	87.001-1011.2/00	UMLENKROLLE	DEFLECTION ROLLER	
59	87.001-3019.2/00	MASSEBAND	GROUND CABLE	
60	412408-050.6/00	GUMMIFUSS	RUBBER FOOT	
61	318102-060.6/00	SELBSTSCHNEIDESCHRAUBE	SELF-TAPPING SCREW	
62	577907-000.6/00	MASSEBAND	GROUND CABLE	
63	336101-060.6/00	ZAHNSCHEIBE	WASHER	
64	034320-000.6/02	SCHEIBE	WASHER	
65	318102-060.6/00	SELBSTSCHNEIDESCHRAUBE	SELF-TAPPING SCREW	
66	87.001-1051.1/00	KONTAKTFEDER	CONTACT SPRING	
67	73.660-1274.1/00	STUETZE FUER EZE	SUPPORT	
68	87.001-1033.1/00	SCHWINGELEMENT	RUBBER-METAL CONNECTION	
69	334838-000.6/00	SCHEIBE	WASHER	
70	335203-000.6/00	SICHERUNGSRING	SAFETY RING	

2. Gestell, Papiertraeger/Chassis, Paper carrier

2.1 Gestell
Chassis

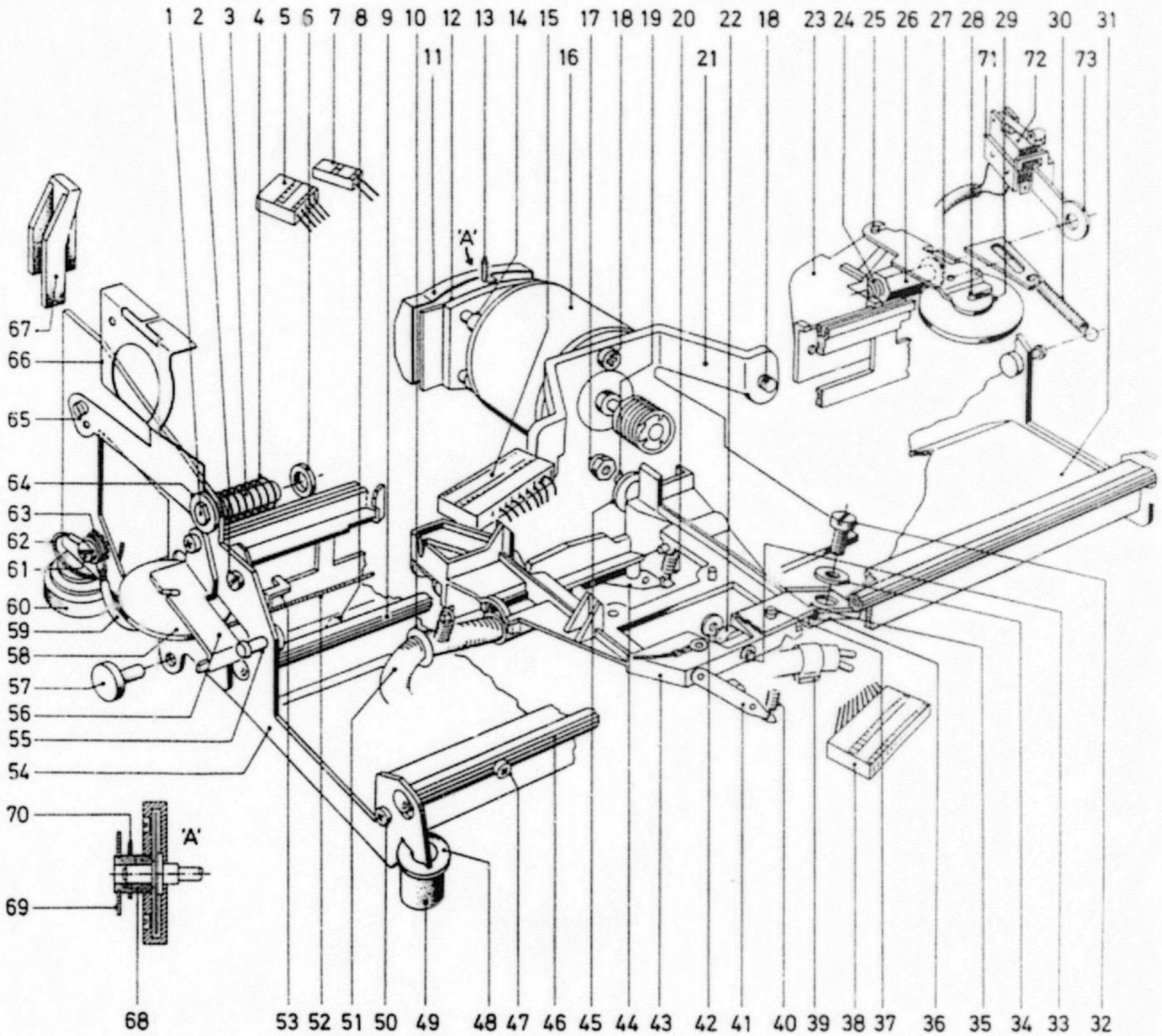

2.2 Papiertraeger (1)
Paper carrier (1)

Pos.-Nr./Bauteil Pos. no./Comp.	Bestell-Nr. Ref. no.	Benennung Deutsch	Term English	Farbe Color
1	87.001-1634.2/00	ZEILENSCHALTRAD	LINE SPACING GEAR	
2	87.001-1632.1/00	WALZENLAGER	BEARING	
3	87.001-1552.2/00	HEBEL LKS.	LEVER L.H.	
4	312653-062.6/00	SELBSTSCHNEIDESCHRAUBE 2,5MM	SELF-TAPPING SCREW 0,10INCH	
5	87.001-1542.2/00	PAPIERABLEITER KPL.	PAPER DIVERTER ASSY.	F002
6	87.001-1557.1/00	PAPIERHALTESTANGE	PAPER RETAINING BAIL	
7	06.3351-131.2/02	PAPIERHALTEROLLE	PAPER RETAINING ROLL	
8	48.001-1154.2/00	ANDRUCKROLLE HINTEN	PRESSURE ROLL REAR	
9	48.001-1157.1/00	ACHSE	SHAFT	
10	355102-000.6/00	ACHSE	SHAFT	
11	67.200-1505.1/00	FEDERBLECH	SPRING-LOADED PLATE	
11	67.200-1505.1/04	FEDERBLECH AB/W.E.F. MASCH. 4579003004043	SPRING-LOADED PLATE	
12	562843-008.6/00	BUCHSENGEHAEUSE 8 POLIG	SOCKET HOUSING 8 POLE	
13	08.2196-001.2/00	PAPIERFUEHRUNGSROLLE	PAPER FEED ROLL	
15	67.600-1516.2/00	PAPIERFUEHRUNGSWANNE	PAPER GUIDE PAN	
16	67.101-1766.2/00	SCHREIBWALZE	PLATEN	
17	87.001-1501.2/00	TRAEGER KPL.	MOUNTING ASSY.	
18	87.001-1538.2/00	SCHRITTMOTOR VERTIKAL	STEPPING MOTOR	
19	87.001-1596.2/00	ROLLENHEBEL	ROLLER LEVER	
20	87.001-1526.1/00	ZAHNRAD 4,25MM 4,25MM ZEILENSCH./LINE SPACE	GEAR 0,17INCH	
20	87.001-1527.1/00	ZAHNRAD 5,00MM 5,00MM ZEILENSCH./LINE SPACE	GEAR 0,20INCH	
21	87.001-1671.1/00	ZAHNRIEMEN	TIMING BELT	
22	353622-006.6/00	BUCHSE	BUSH	
23	67.001-1020.1/00	EXZENTERBUCHSE	ECCENTRIC BUSH	
24	87.001-1640.1/00	ACHSE	SHAFT	
25	012552-000.6/00	ZYLINDERSCHRAUBE M4X7	PAN-HEADED SCREW M4X7	
26	87.001-1639.1/00	RITZEL F. WALZENVERSTELLUNG	PINION	
27	047663-060.6/00	SPANNSTIFT	DOWEL PIN	
28	87.001-1602.1/01	HEBEL	LEVER	F313

2.2 Papiertraeger (1)
Paper carrier (1)

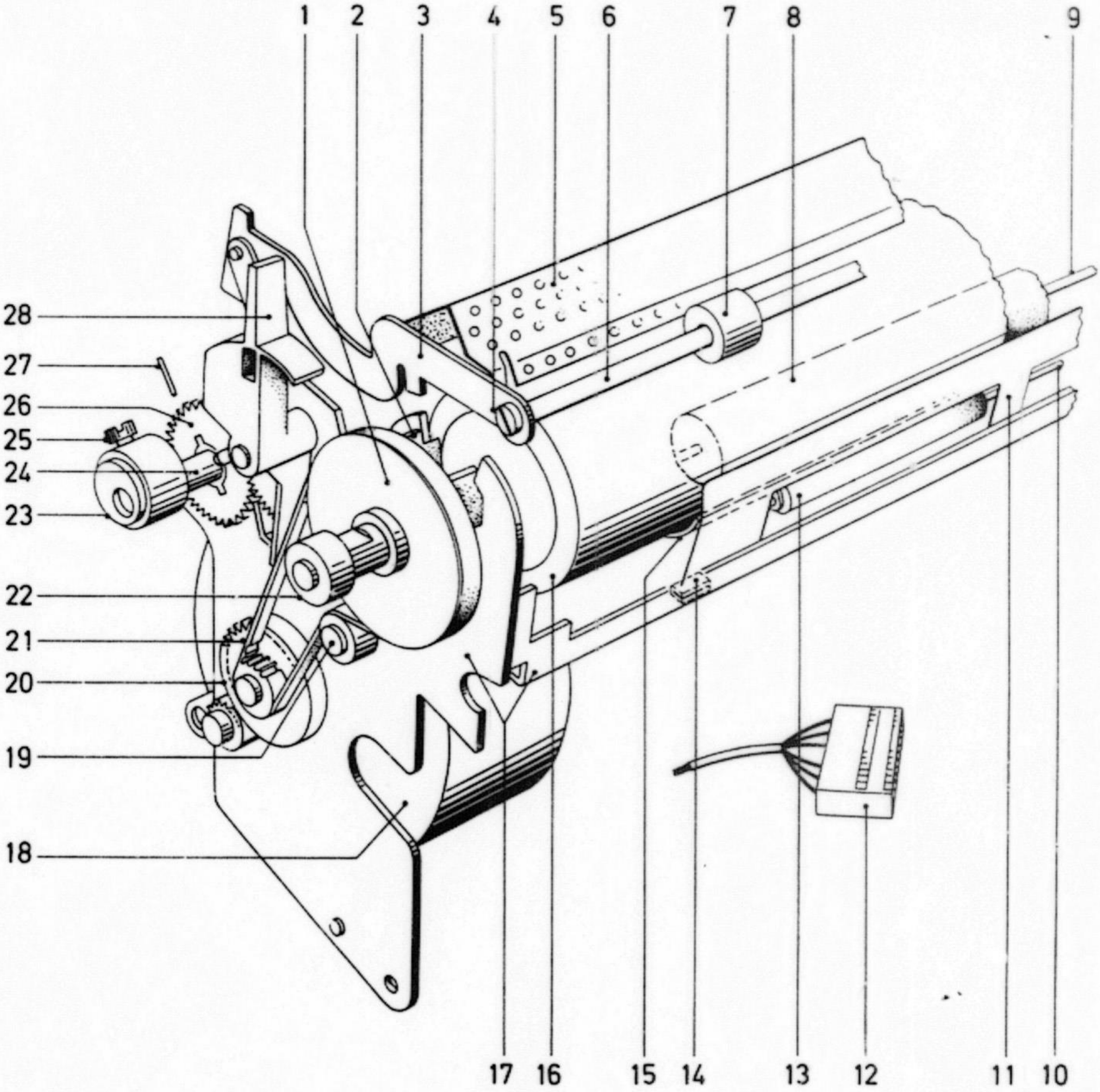

2.3 Papiertraeger (2)
Paper carrier (2)

Pos.-Nr./Bauteil Pos. no./Comp.	Bestell-Nr. Ref. no.	Benennung Deutsch	Term English	Farbe Color
1	562843-004.6/00	BUCHSENGEHAEUSE 4 POLIG	SOCKET HOUSING 4 POLE	
2	312510-000.6/00	ZYLINDERSCHRAUBE M2,5X4	PAN-HEADED SCREW M2,5X4	
3	87.001-1678.2/00	GLEICHSTROMMOTOR	DC MOTOR	
4	695126-000.6/00	DAEMPFUNG	DAMPING	
5	316102-066.6/00	GEWINDESTIFT M3X16	THREADED PIN M3X16	
6	87.001-1561.1/00	UEBERTRAGUNGSBRUECKE	TRANSMISSION BRIDGE	
7	084154-000.6/00	ZUGFEDER	TENSION SPRING	
8	87.001-1554.2/00	HEBEL RTS.	LEVER R.H.	
9	87.001-1612.1/01	PAPIERLOESER	PAPER RELEASE	F313
10	353623-006.6/00	BUCHSE	BUSH	
11	67.500-1595.1/00	LAGER	BEARING	
12	015017-060.6/00	LINSENSCHRAUBE M3X5	OVAL-HEADED SCREW M3X5	
13	87.001-1548.1/00	ACHSE	SHAFT	
14	67.500-1591.2/00	WALZENANTRIEB	PLATEN DRIVE	
15	87.001-1578.1/00	RITZEL F. PAPIERLOESUNG	PINION	
16	87.001-1632.1/00	WALZENLAGER	BEARING	
17	67.200-1511.1/00	PAPIERLOESEWELLE	PAPER RELEASE SHAFT	
18	67.001-1514.1/00	BLATTFEDER	FLAT SPRING	
19	562843-003.6/00	BUCHSENGEHAEUSE 3 POLIG	SOCKET HOUSING 3 POLE	
20	67.600-1620.2/00	LEITERPLATTE KPL.	PCB ASSY.	
21	87.001-1650.2/00	GETRIEBE KPL.	BEARING ASSY.	
22	541003-000.6/00	MIKROSCHALTER	MICROSWITCH	
23	67.001-1590.1/00	LASCHE	LIP	

2. Gestell, Papiertraeger/Chassis, Paper carrier

2.3 Papiertraeger (2)
Paper carrier (2)

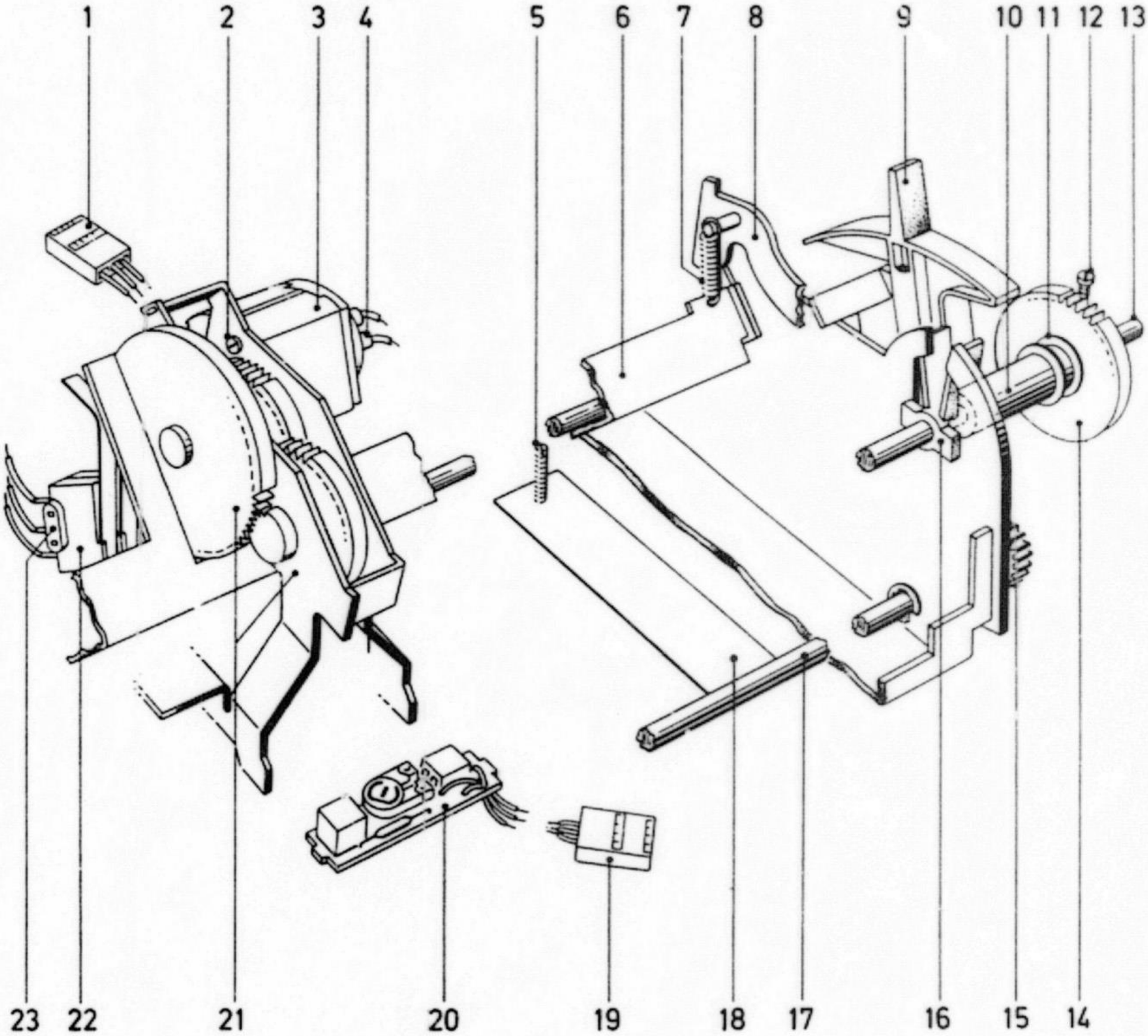

3. Druckwerk/Printer

3.1 Druckwerk, Typenradtraeger
Printer, Typewheel carrier

Pos.-Nr./Bauteil Pos. no./Comp.	Bestell-Nr. Ref. no.	Benennung Deutsch	Term English	Farbe Color
1	87.001-2221.1/00	BANDABWEISER	RIBBON DIVERTER	
2	87.001-2160.2/00	RADAUFNAHME	WHEEL MOUNTING	
3	87.001-2164.1/00	MITNEHMER	DRIVER	
4	87.001-2011.1/00	KARTENHALTER	CARD HOLDER	
5	87.001-2305.1/00	FUEHRUNG	GUIDE	
6	87.001-2306.1/00	FEDER	SPRING	
7	012527-000.6/00	ZYLINDERSCHRAUBE M3X5	PAN-HEADED SCREW M3X5	
8	085688-000.6/00	ZUGFEDER	TENSION SPRING	
9	87.001-2310.2/00	ABSCHLAGMAGNET	STROKE SOLENOID	
10	87.001-2303.1/00	DECKEL	COVER	
11	87.001-2076.1/00	KASSETTENFUEHRUNG RTS.	CASSETTE GUIDE R.H.	
12	085688-000.6/00	ZUGFEDER	TENSION SPRING	
13	67.001-2282.1/70	KNOPF	KNOB	F313
14	87.001-2136.1/00	HEBEL	LEVER	
15	87.001-2300.2/00	ABSCHLAGSYSTEM	STROKE SYSTEM	
16	87.001-2113.2/01	SCHWENKLAGER MIT MOTOR	PIVOT BEARING WITH MOTOR	
17	87.001-2120.2/00	OPTO-ENCODER ELEPRINT	OPTO ENCODER ELEPRINT	
18	316125-000.6/00	GEWINDESTIFT M3X3	THREADED PIN M3X3	
19	311419-002.6/00	LINSENSCHRAUBE M3X12	OVAL-HEADED SCREW M3X12	
20	87.001-2000.2/00	DRUCKWERK KPL. OHNE KORREKTUR	PRINTER ASSY. WITHOUT CORRECTION	
20	87.004-2000.2/00	DRUCKWERK KPL. MIT KORREKTUR	PRINTER ASSY. WITH CORRECTION	
21	87.001-2062.1/00	HEBEL	LEVER	
22	87.001-2055.1/00	ACHSE	SHAFT	
23	331324-000.6/00	SECHSKANTMUTTER M4	HEXAGONAL NUT M4	
24	356214-006.6/00	ACHSE	SHAFT	
25	87.001-2146.2/00	ANDRUCKLAGER	PRESSURE BEARING	
26	012525-000.6/00	ZYLINDERSCHRAUBE M3X3	PAN-HEADED SCREW M3X3	
27	87.001-2301.5/00	SPULENKOERPER	COIL FORM	
28	481431-000.6/00	ZUGFEDER	TENSION SPRING	
29	87.001-2075.1/00	KASSETTENFUEHRUNG LKS.	CASSETTE GUIDE L.H.	
30	356212-006.6/00	ACHSE	SHAFT	
31	356214-006.6/00	ACHSE	SHAFT	
32	87.001-2134.1/00	RIEGEL	LATCH	
33	87.001-2004.1/00	HALTERUNG	MOUNTING	
34	87.001-2220.1/00	WINKEL	ANGLE	
O.ILLUSTR.	87.001-2103.2/00	MOTOR F. TYPENRAD	MOTOR FOR TYPEWHEEL	

3. Druckwerk/Printer

3.1 Druckwerk, Typenradtraeger
Printer, Typewheel carrier

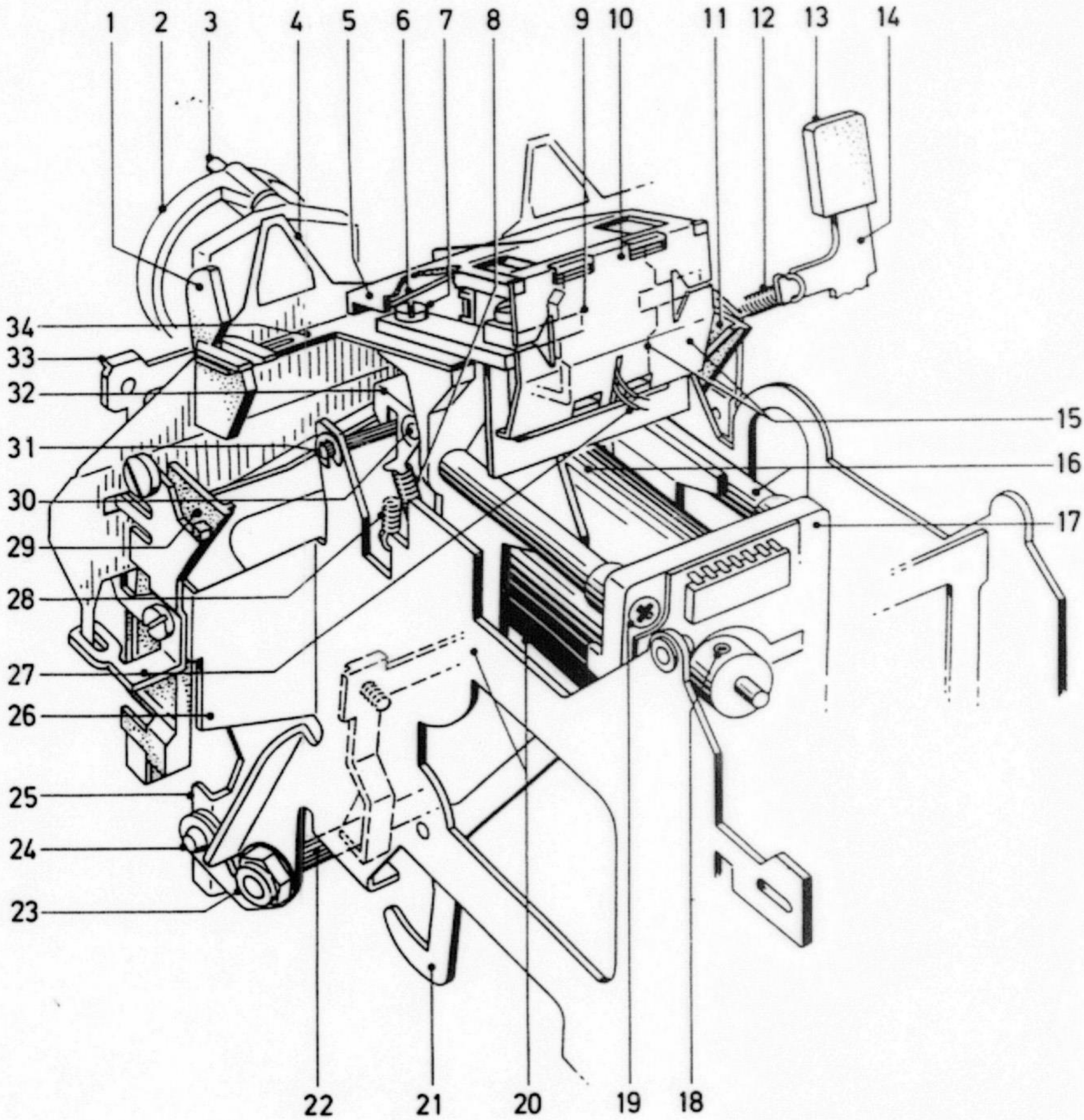

3.2 Farbbandtransport, Korrektureinrichtung
Ribbon transport, Correction device

Pos.-Nr./Bauteil Pos. no./Comp.	Bestell-Nr. Ref. no.	Benennung Deutsch	Term English	Farbe Color
1	87.004-2292.1/00	TRANSPORTRAD F. KORREKTUR	TRANSPORT GEAR FOR CORRECTION	
2	67.004-2386.1/00	ROLLE	ROLLER	
4	87.001-2270.2/00	KONTAKTTRAEGER KPL.	CONTACT SUPPORT ASSY.	
5	87.001-2068.1/00	GLEICHSTROMMAGNET	SOLENOID	
6	87.001-2254.1/00	ANSCHLAGZAPFEN	BOLT	
7	314139-006.6/00	SECHSKANTSCHRAUBE M3X8	HEXAGONAL BOLT M3X8	
8	87.004-2250.2/00	GRUNDPLATTE	BASE PLATE	
9	87.001-2114.2/00	DRUCKWERKSLEITERPLATTE	PRINTER PCB	
10	331307-000.6/00	SECHSKANTMUTTER	HEXAGONAL NUT	
11	034306-000.6/00	SCHEIBE	WASHER	
12	87.001-2276.1/00	ACHSE	SHAFT	
13	353259-050.6/00	ROLLE	ROLLER	
14	87.001-2264.1/01	ZAHNRAD	GEAR	
15	041413-010.6/00	ROHRNIET	TUBULAR RIVET	
16	87.004-2260.1/00	BLATTFEDER	FLAT SPRING	
17	87.001-2267.1/00	RASTKLINKE	DETENT PAWL	
18	87.001-2262.1/00	MITNEHMER	DRIVER	
19	87.001-2257.1/00	BUCHSE	BUSH	
20	87.004-2293.1/00	ROLLENFUEHRUNG	ROLLER GUIDE	
21	87.004-2277.1/00	ROLLE	ROLLER	
22	87.004-2290.1/00	UMLENKROLLE	GUIDE ROLLER	
23	084007-000.6/01	ZUGFEDER	TENSION SPRING	
24	87.004-2280.1/00	ANTRIEBSRAD	DRIVE WHEEL	
25	87.001-2263.1/00	TRANSPORTKLINKE	TRANSPORT PAWL	
26	87.001-2265.1/00	ANTRIEBSRAD	DRIVE WHEEL	
27	87.004-2286.1/00	TRANSPORTHEBEL	TRANSPORT LEVER	
28	87.004-2281.1/00	BREMSE	BRAKE	
29	87.001-2261.1/02	ZAHNRAD	GEAR	
30	481411-000.6/00	ZUGFEDER	TENSION SPRING	
31	87.004-2294.1/00	HALTERUNG	MOUNTING	
32	87.004-2299.1/00	SPERRHEBEL	DETENT LEVER	
33	083382-000.6/00	ZUGFEDER	TENSION SPRING	
34	084008-000.6/00	ZUGFEDER	TENSION SPRING	
35	083418-000.6/00	ZUGFEDER	TENSION SPRING	
36	87.004-2298.2/00	SCHWENKHEBEL	LEVER	
37	083364-000.6/00	ZUGFEDER	TENSION SPRING	
38	87.004-2295.1/00	SCHIEBER	SLIDE	
39	67.001-2282.1/00	KNOPF	KNOB	
40	87.001-2070.2/03	FARBBANDANTRIEB KPL.	RIBBON DRIVE ASSY.	
41	87.004-2283.1/00	SCHALTRAD	ESCAPEMENT WHEEL	
42	87.004-2287.1/00	TRANSPORTKLINKE	TRANSPORT PAWL	
43	87.004-2284.4/00	TRANSPORTRAD	TRANSPORT GEAR	
44	012527-000.6/00	ZYLINDERSCHRAUBE M3X5	PAN-HEADED SCREW M3X5	

3.2 Farbbandtransport, Korrektureinrichtung
Ribbon transport, Correction device

Pos.-Nr./Bauteil Pos. no./Comp.	Bestell-Nr. Ref. no.	Benennung Deutsch	Term English	Farbe Color
45	87.004-2285.1/00	RASTPLATTE	DETENT PLATE	
46	79.031-3040.1/00	MAGNET	MAGNET	
47	012525-000.6/00	ZYLINDERSCHRAUBE M3X3	PAN-HEADED SCREW M3x3	
48	353136-000.6/00	ROLLE	ROLLER	
49	083382-000.6/00	ZUGFEDER	TENSION SPRING	
50	87.004-2278.2/00	LEITERPLATTE HALLGENERATOR	PCB HALL GENERATOR	
51	87.001-2066.1/00	WINKEL	ANGLE	
52	87.004-2297.1/00	SPERRFEDER	SPRING	
53	87.004-2291.1/00	KLINKE	PAWL	
54	083468-000.6/00	ZUGFEDER	TENSION SPRING	

3. Druckwerk/Printer

3.2 Farbbandtransport, Korrektureinrichtung
Ribbon transport, Correction device

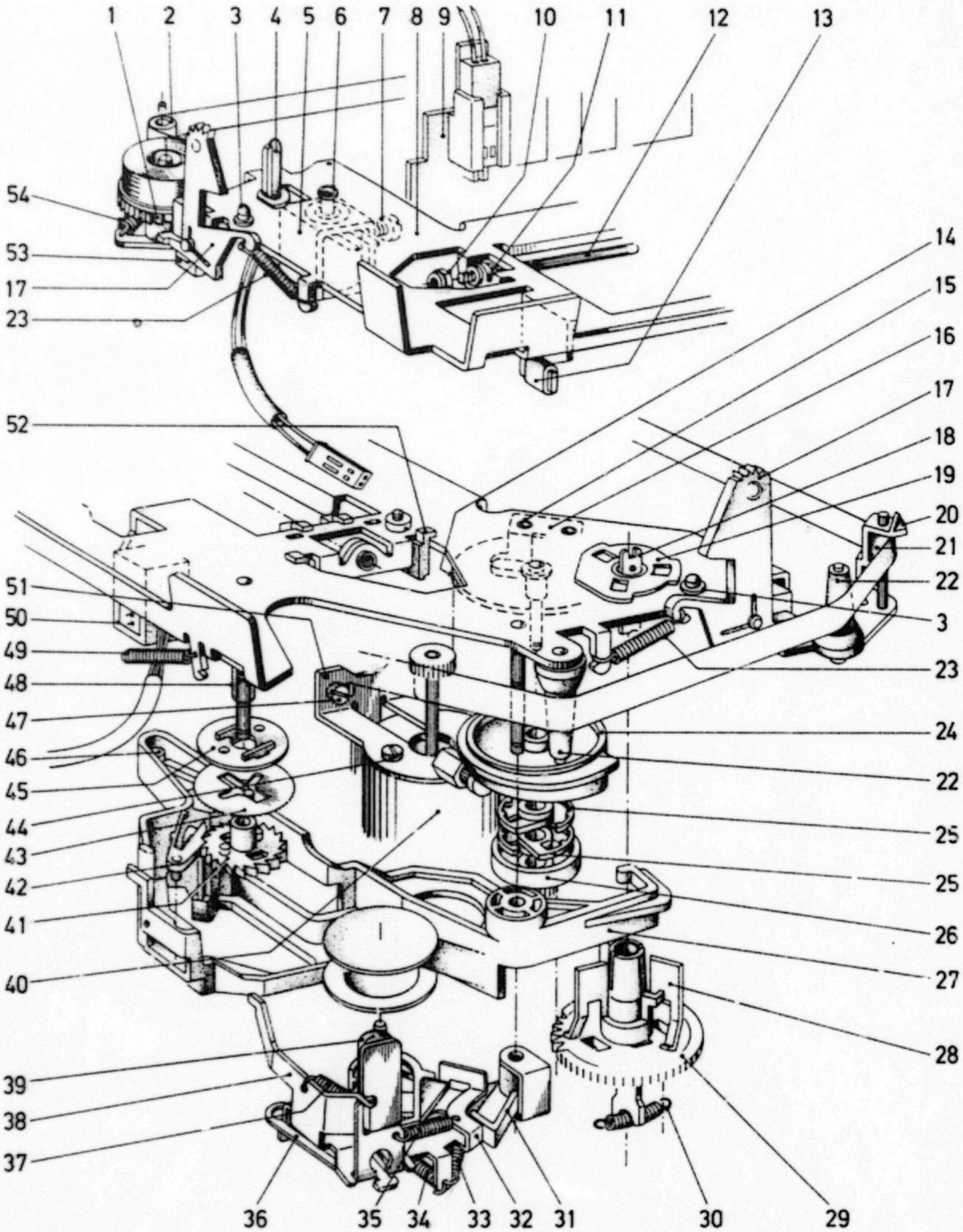

3.3 Druckwerksleiterplatte
Printer pcb

Pos.-Nr./Bauteil Pos. no./Comp.	Bestell-Nr. Ref. no.	Benennung Deutsch	Term English	Farbe Color
	87.001-2114.2/00	DRUCKWERKSLEITERPLATTE	PRINTER PCB	
St1	562349-020.6/00	STIFTLEISTE 20 POLIG	CONNECTOR STRIP 20 POLE	
St2	562355-004.6/00	STIFTLEISTE 4 POLIG	CONNECTOR STRIP 4 POLE	
St3	562332-006.6/00	STIFTLEISTE 6 POLIG	CONNECTOR STRIP 6 POLE	
St4	562355-002.6/00	STIFTLEISTE 2 POLIG	CONNECTOR STRIP 2 POLE	
St5	562355-302.6/00	STIFTLEISTE 2 POLIG GRUEN	CONNECTOR STRIP 2 POLE GREEN	
St6	562355-102.6/00	STIFTLEISTE 2 POLIG ROT	CONNECTOR STRIP 2 POLE RED	
St7	562355-202.6/00	STIFTLEISTE 2 POLIG BLAU	CONNECTOR STRIP 2 POLE BLUE	
St8	562358-003.6/00	STIFTLEISTE 3 POLIG SCHWARZ	CONNECTOR STRIP 3 POLE BLACK	

3.3 Druckwerksleiterplatte
Printer pcb

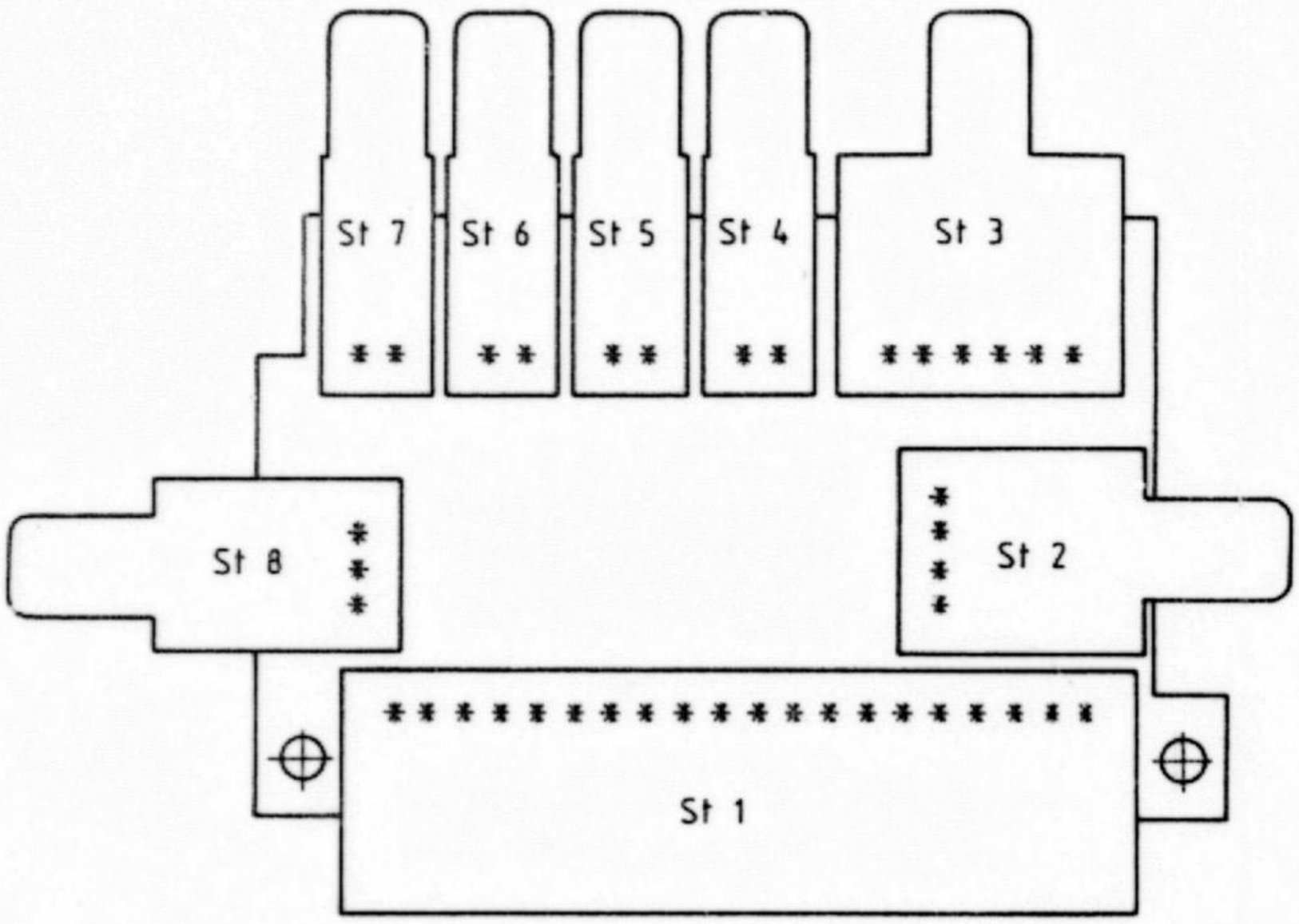

4.1 Stromversorgung, getaktet
Power supply, Pulsed

Pos.-Nr./Bauteil Pos. no./Comp.	Bestell-Nr. Ref. no.	Benennung Deutsch	Term English	Farbe Color
	87.001-3605.2/00	STROMVERSORG. GETAKTET KPL	POWER SUPPLY PULSED ASSY. E001	
	87.001-3605.5/00	REP.-STROMVERSORGUNG E001	EXCH. POWER PACK E001	
	87.001-3606.2/00	STROMVERSORG. GETAKTET KPL. USA	POWER SUPPLY PULSED ASSY. E005	
	87.001-3606.5/00	REP.-STROMVERSORGUNG KPL. E005 USA	EXCH. POWER PACK ASSY. E005	
1	87.001-3525.2/00	GERAETESTECKER KPL.	APPLIANCE PLUG ASSY.	
2	666744-300.6/00	SICHERUNG 2A/125V USA	FUSE 2A/125V USA	
2	666513-300.6/00	SICHERUNG 2A T	FUSE 2A T	
3	87.001-3526.1/00	KNOPF	KNOB	
4	87.001-3541.1/00	ABDECKUNG F. NETZSCHALTER	COVER FOR POWER SWITCH	
BU3	566303-000.6/00	FEDERLEISTE 24 POLIG	MULTIPOLE CONNECTOR 24 POLE	
Bu7	87.001-3570.2/00	FLACHBANDLEITER KPL.	FLAT CABLE ASSY.	
Bu8	87.001-3572.2/00	FLACHBANDLEITER	FLAT CABLE	
C101	661755-017.6/00	ENTSTOERKONDENS. 1UF 250V	INTERF. SUPPRESS. COND. 1UF 250V	
C102	661754-000.6/00	FUNKENTSTOERKONDENSATOR	INTERF. SUPPRESS. CONDENSER	
C103	661315-000.6/00	AL-ELKO 330UF 385V	AL. EL. CONDENSER 330UF 385V	
C104	662767-000.6/00	AL-ELKO 47UF 40V	CONDENSER 47UF 40V	
C105,109	662759-000.6/00	AL-ELKO 4,7UF 35V	AL. EL. CONDENSER 4,7UF 35V	
C106	661316-000.6/00	AL-ELKO 2,2UF 100V	AL. EL. CONDENSER 2,2UF 100V	
C107,118,121,125	662440-000.6/00	KONDENSATOR 0,33UF 50V	CONDENSER 0,33UF 50V	
C108	662458-000.6/00	KONDENSATOR 10NF 63V	CONDENSER 10NF 63V	
C110	662243-000.6/00	KONDENSATOR 4,7NF 63V	CONDENSER 4,7NF 63V	
C111	662465-000.6/00	KONDENSATOR 470PF 63V	CONDENSER 470PF 63V	
C112,126	662416-000.6/00	KER-KONDENSATOR 1NF 1000V	CERAMIC CONDENSER 1NF 1000V	
C113,114	662775-000.6/00	AL-ELKO 6800UF 40V	AL. EL. CONDENSER 6800UF 40V	
C115,116	662774-000.6/00	AL-ELKO 2200UF 25V	AL. EL. CONDENSER 2200UF 25V	
C117	662244-000.6/00	MKT-KONDENSATOR 330NF 100V	MCT CONDENSER 330NF 100V	
C119,120	662245-000.6/00	KONDENSATOR 220NF 100V	CONDENSER 220NF 100V	
C122	662795-000.6/00	AL-ELKO 15NF 63V	AL. EL. CONDENSER 15NF 63V	
C123,124	661767-000.6/00	ENTSTOERKONDENSATOR 4,4NF	INTERF. SUPPRESS. CONDENSER 4,4N	
D101..104,113,116	672166-000.6/00	DIODE 500/600	DIODE 500/600	
D105,106	672107-000.6/00	DIODE 1N4004	DIODE 1N4004	
D107,108	672155-014.6/00	DIODE BA159	DIODE BA159	
D109..112	672392-000.6/00	Z-DIODE BZX85-C22 22V	Z DIODE BZX85-C22 22V	
D117,118	672167-000.6/00	DIODE GI824	DIODE GI824	
D120..123	672100-000.6/00	DIODE 1N4148	DIODE 1N4148	
D124,125	672369-000.6/00	Z-DIODE ZPY15 15V	Z DIODE ZPY15 15V	
DR11	695147-000.6/00	ENTSTOERDROSSEL 155UH	INTERFERENCE SUPPRESSION CHOKE	
DR12	695150-000.6/00	FUNKENTSTOERDROSSEL 2,16UH	INTERF. SUPPRESS. CHOKE 2,16UH	
IS11	676739-000.6/00	REGLER SG3526	REGULATOR SG3526	
IS12	676721-000.6/00	REGLER 7812C	REGULATOR 7812C	
IS13	676198-003.6/00	2FACH-NOR-GATTER 4001	2FOLD NOR GATE 4001	

4. Stromversorgung/Power supply

4.1 Stromversorgung, getaktet
Power supply, Pulsed

Pos.-Nr./Bauteil Pos. no./Comp.	Bestell-Nr. Ref. no.	Benennung Deutsch	Term English	Farbe Color
O.ILLUSTR.	87.001-3542.1/00	ISOLIERPLATTE	ISOLATING PLATE	
R101	664122-000.6/00	NTC-WIDERSTAND	NTC RESISTOR	
R102	664123-000.6/00	WIDERSTAND 5KOHM 7W PTC	RESISTOR 5KOHM 7W PTC	
R103	663265-000.6/00	WIDERSTAND 1MOHM	RESISTOR 1MOHM	
R104	663151-000.6/00	WIDERSTAND 3,3KOHM 20% 4W	RESISTOR 3,3KOHM 20% 4W	
R105,124	663408-120.6/00	KOSCHIWI 2,2 OHM 5% 1/4W	RESISTOR 2,2 OHM 5% 1/4W	
R106,115	663284-000.6/00	MESCHIWI 3,09KOHM 1/3W	METALLIC RESISTOR 3,09KOHM 1/3W	
R107,119	663291-000.6/00	WIDERSTAND 1,24KOHM 1/4W	RESISTOR 1,24KOHM 1/4W	
R108	663714-320.6/00	KOSCHIWI 56KOHM 5% 1/4W	CARBON RESISTOR 56KOHM 5% 1/4W	
R109	663480-320.6/00	KOSCHIWI 2,2KOHM 5% 1/4W	RESISTOR 2,2KOHM 5% 1/4W	
R110..112,135	663436-120.6/00	KOSCHIWI 33 OHM 5% 1/8W	CARBON RESISTOR 33 OHM 5% 1/8W	
R113,127,128	663682-320.6/00	KOSCHIWI 2,7KOHM 5% 1/4W	RESISTOR 2,7KOHM 5% 1/4W	
R114	663054-000.6/00	DRAHTWIDERSTAND 390 OHM 5% 4W	WIRE RESISTOR 390 OHM 5% 4W	
R116	87.001-3522.1/00	DRAHTWIDERSTAND 0,027 OHM	WIRE RESISTOR 0,027 OHM	
R118,125,126	663672-320.6/00	KOSCHIWI 1KOHM 5% 1/4W	RESISTOR 1KOHM 5% 1/4W	
R120	663692-320.6/00	KOSCHIWI 6,8KOHM 5% 1/4W	CARBON RESISTOR 6,8KOHM 5% 1/4W	
R121,122	663476-320.6/00	KOSCHIWI 1,5KOHM 5% 1/4W	CARBON RESISTOR 1,5KOHM 5% 1/4W	
R123	663400-120.6/00	KOSCHIWI 1 OHM 5% 1/4W	CARBON RESISTOR 1 OHM 5% 1/4W	
R129,130	663714-310.6/00	KOSCHIWI 56KOHM 5% 1/4W	CARBON RESISTOR 56KOHM 5% 1/4W	
R131,132,134	663496-320.6/00	KOSCHIWI 10KOHM 5% 1/4W	RESISTOR 10KOHM 5% 1/4W	
R133	663710-320.6/00	KOSCHIWI 39KOHM 5% 1/4W	RESISTOR 39KOHM 5% 1/4W	
R136	663301-000.6/00	WIDERSTAND 390KOHM	RESISTOR 390KOHM	
R137	663626-320.6/00	KOSCHIWI 12 OHM 1/4W	CARBON RESISTOR 12 OHM 1/4W	
RL1	693454-000.6/00	RELAIS	RELAY	
S1	563612-000.6/00	TASTENSCHALTER	KEY SWITCH	
Si1	666581-000.6/00	SICHERUNGSHALTER	FUSE HOLDER	
St4	562354-003.6/00	STIFTLEISTE 3 POLIG	CONNECTOR STRIP 3 POLE	
St6,7	561800-000.6/00	FLACHSTECKER	FLAT CONNECTOR	
TR11	87.001-3610.2/00	UEBERTRAGER	TRANSDUCER	
TS10,11,12	87.001-3620.2/00	TRANSISTOR MOS-FET	TRANSISTOR MOS FET	
TS13,14	675144-000.6/00	TRANSISTOR BC327	TRANSISTOR BC327	
TS15,16	675247-000.6/00	TRANSISTOR BC517	TRANSISTOR BC517	

4. Stromversorgung/Power supply

4.1 Stromversorgung, getaktet
Power supply, Puised

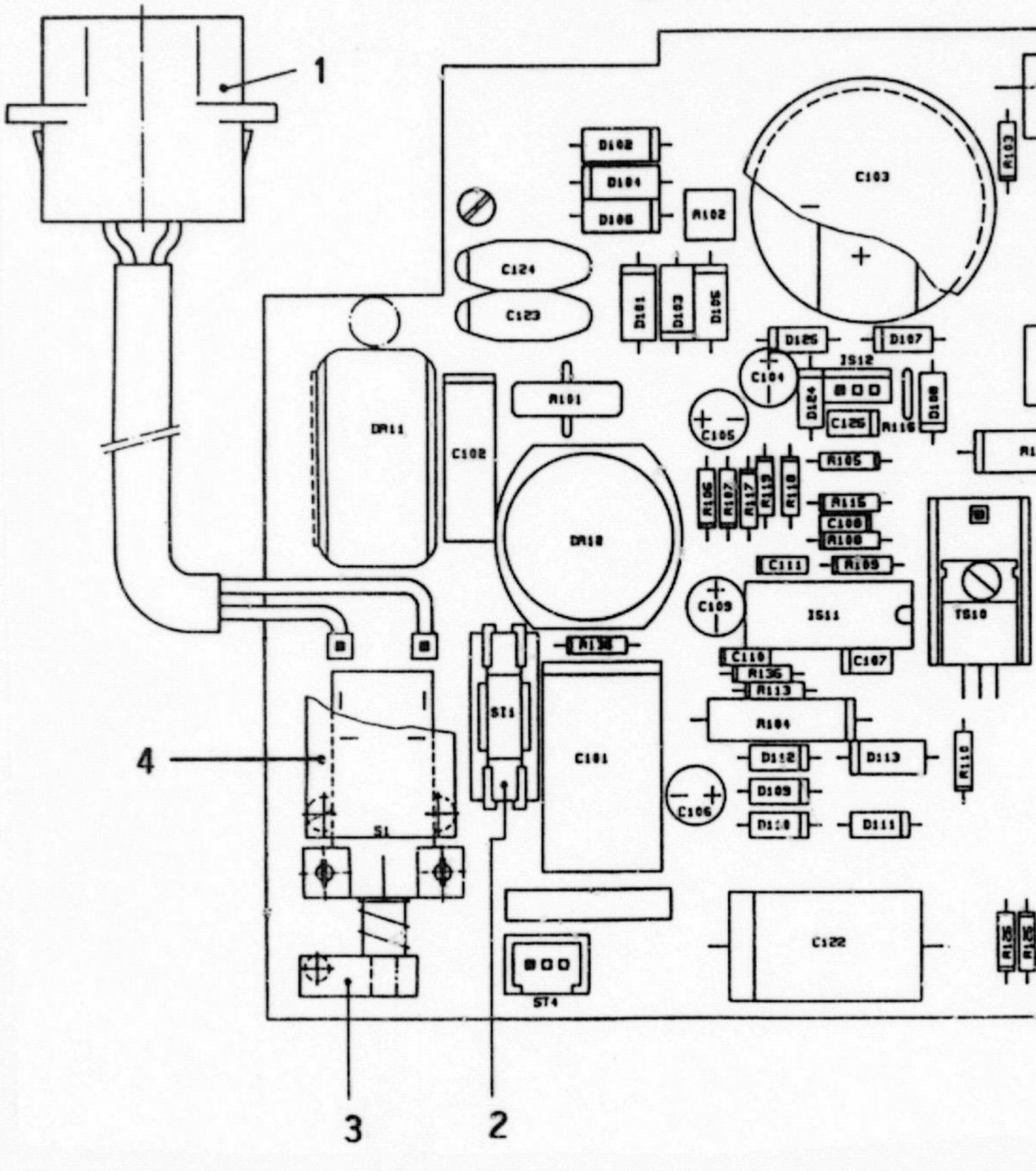

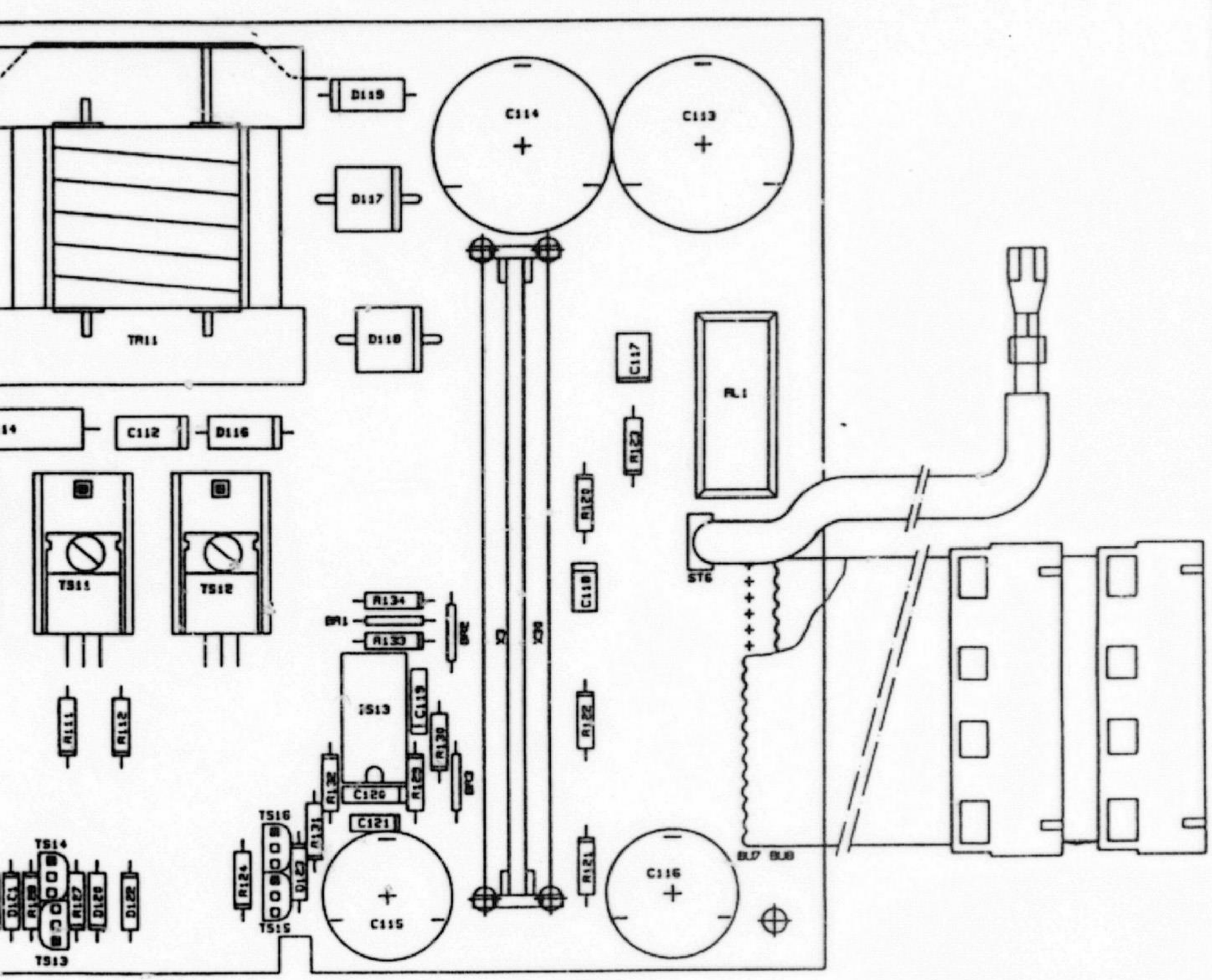
D119
C114
C113
D117
TR11
D118
C117
RL1
C112
D116
R12
R129
TS11
TS12
R134
BR1
R133
BR2
C110
X2
X30
TS13
C119
R130
R122
C120
R132
R131
C121
TS16
R124
D121
TS14
C115
C116
R121
TS15
TS13
BU7 BU8
ST6

1.2 Leiterplatte Spannungsregelung
Pcb voltage regulation

Pos.-Nr./Bauteil Pos. no./Comp.	Bestell-Nr. Ref. no.	Benennung Deutsch	Term English	Farbe Color
1	87.001-3556.2/04	LEITERPL. SPANNUNGSREGELUNG	PCB VOLTAGE REGULATION	
1	87.001-3556.5/04	REP.-LEITERPLATTE	EXCH. PCB	
2	87.001-3559.1/00	KONTAKTFEDER	SPRING	
C16	662767-000.6/00	AL-ELKO 47UF 40V	CONDENSER 47UF 40V	
C18..23,31,50	662440-000.6/00	KONDENSATOR 0,33UF 50V	CONDENSER 0,33UF 50V	
C20,21	662756-001.6/00	KONDENSATOR 10UF 40V	CONDENSER 10UF 40V	
C25	662243-000.6/00	KONDENSATOR 4,7NF 63V	CONDENSER 4,7NF 63V	
C26	662458-000.6/00	KONDENSATOR 10NF 63V	CONDENSER 10NF 63V	
C27	662484-000.6/00	KONDENSATOR 47PF 63V	CONDENSER 47PF 63V	
C28	662773-000.6/00	AL-ELKO 2,2NF 16V	AL. EL. CONDENSER 2,2NF 16V	
D1,2,5,7,50	672100-000.6/00	DIODE 1N4148	DIODE 1N4148	
D3	672368-000.6/00	Z-DIODE BZX55B5V6 5,6V	Z DIODE BZX55B5V6 5,6V	
D4	672325-000.6/00	Z-DIODE BZX55B6V2 6,2V	Z DIODE BZX55B6V2 6,2V	
D8,10	672159-000.6/00	DIODE BYS21	DIODE BYS21	
DR3	87.001-3517.1/00	ENTSTOERDROSSEL 300MF 3A	INTERFERENCE SUPPRESSION CHOKE	
IS1,6	676721-000.6/00	REGLER 7812C	REGULATOR 7812C	
IS2	676730-000.6/00	SPANNUNGSREGLER 12V	VOLTAGE REGULATOR 12V	
IS3	87.001-3549.2/00	TRANSISTOR	TRANSISTOR	
IS4	676739-000.6/00	REGLER SG3526	REGULATOR SG3526	
IS5	676544-000.6/00	4FACH-KOMPARATOR 339	4FOLD COMPARATOR 339	
R10,17,30	663290-000.6/00	WIDERSTAND 10,2KOHM 1/4W	RESISTOR 10,2KOHM 1/4W	
R11,21,26	663288-000.6/00	WIDERSTAND 14,3KOHM 1/4W	RESISTOR 14,3KOHM 1/4W	
R15	87.001-3522.1/00	DRAHTWIDERSTAND 0,027 OHM	WIRE RESISTOR 0,027 OHM	
R18,60	663299-000.6/00	WIDERSTAND 46,4 OHM 1/4W	RESISTOR 46,4 OHM 1/4W	
R22	663296-000.6/00	WIDERSTAND 1,54KOHM 1/4W	RESISTOR 1,54KOHM 1/4W	
R27	663291-000.6/00	WIDERSTAND 1,24KOHM 1/4W	RESISTOR 1,24KOHM 1/4W	
R28	663289-000.6/00	WIDERSTAND 2,43KOHM 5% 1/4W	RESISTOR 2,43KOHM 5% 1/4W	
R29	665802-000.6/00	WIDERSTAND 5,49 KOHM	RESISTOR 5,49 KOHM	
R6,13,14,16,19,20	663296-000.6/00	WIDERSTAND 1,54KOHM 1/4W	RESISTOR 1,54KOHM 1/4W	
R7,R9,R12	663298-000.6/00	WIDERSTAND 10KOHM 1/4W	RESISTOR 10KOHM 1/4W	
R8,R23..25	663297-000.6/00	WIDERSTAND 6,81KOHM 1/4W	RESISTOR 6,81KOHM 1/4W	
TS1	675273-000.6/00	TRANSISTOR BD646	TRANSISTOR BD646	
TS2	675144-000.6/00	TRANSISTOR BC327	TRANSISTOR BC327	
TS3	675143-000.6/00	TRANSISTOR BC237A	TRANSISTOR BC237A	
TS4	675247-000.6/00	TRANSISTOR BC517	TRANSISTOR BC517	
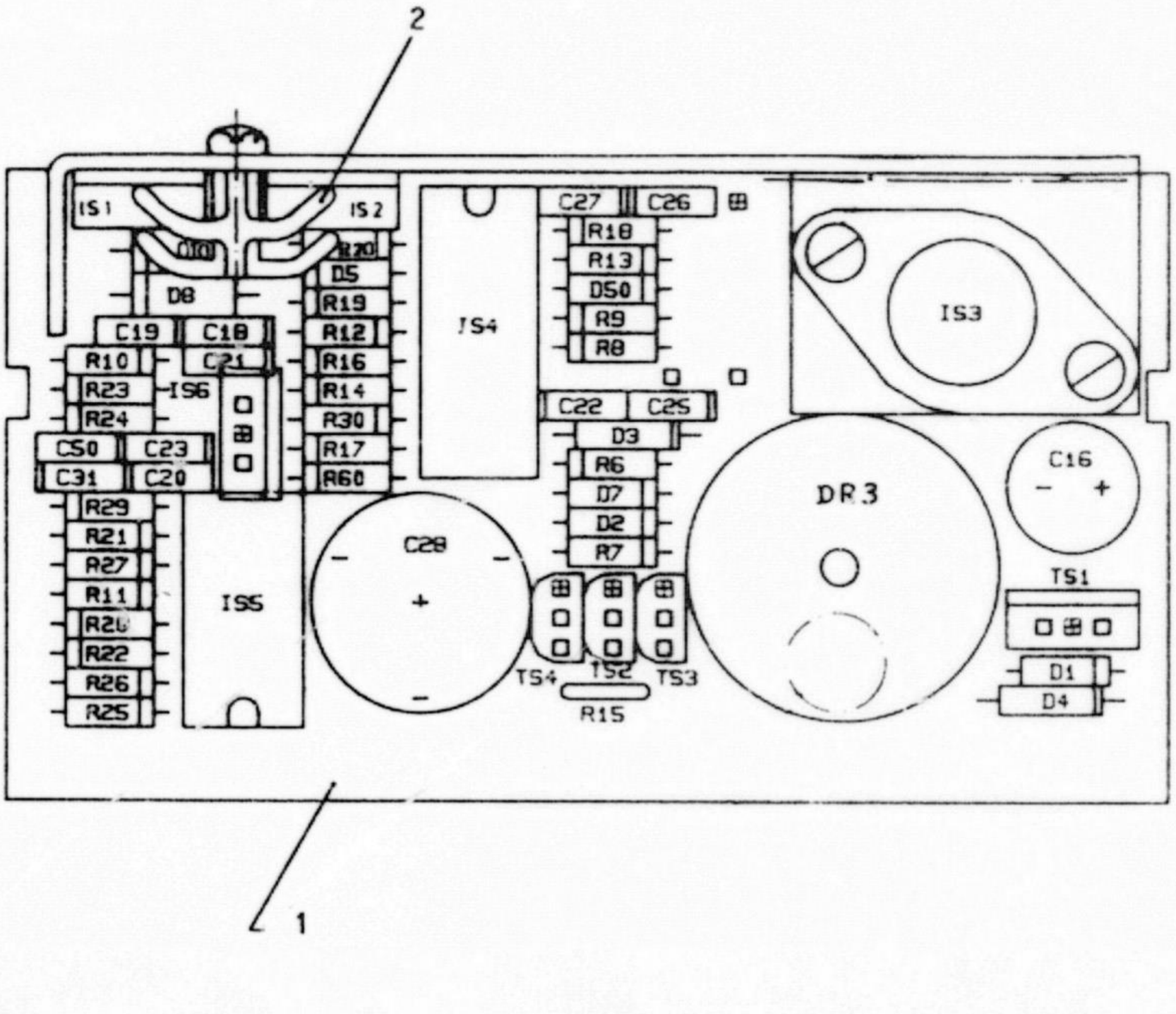
4.2 Leiterplatte Spannungsregelung
Pcb voltage regulation